arteche

ELECTRICAL FIELDS IN INSTRUMENT TRANSFORMERS

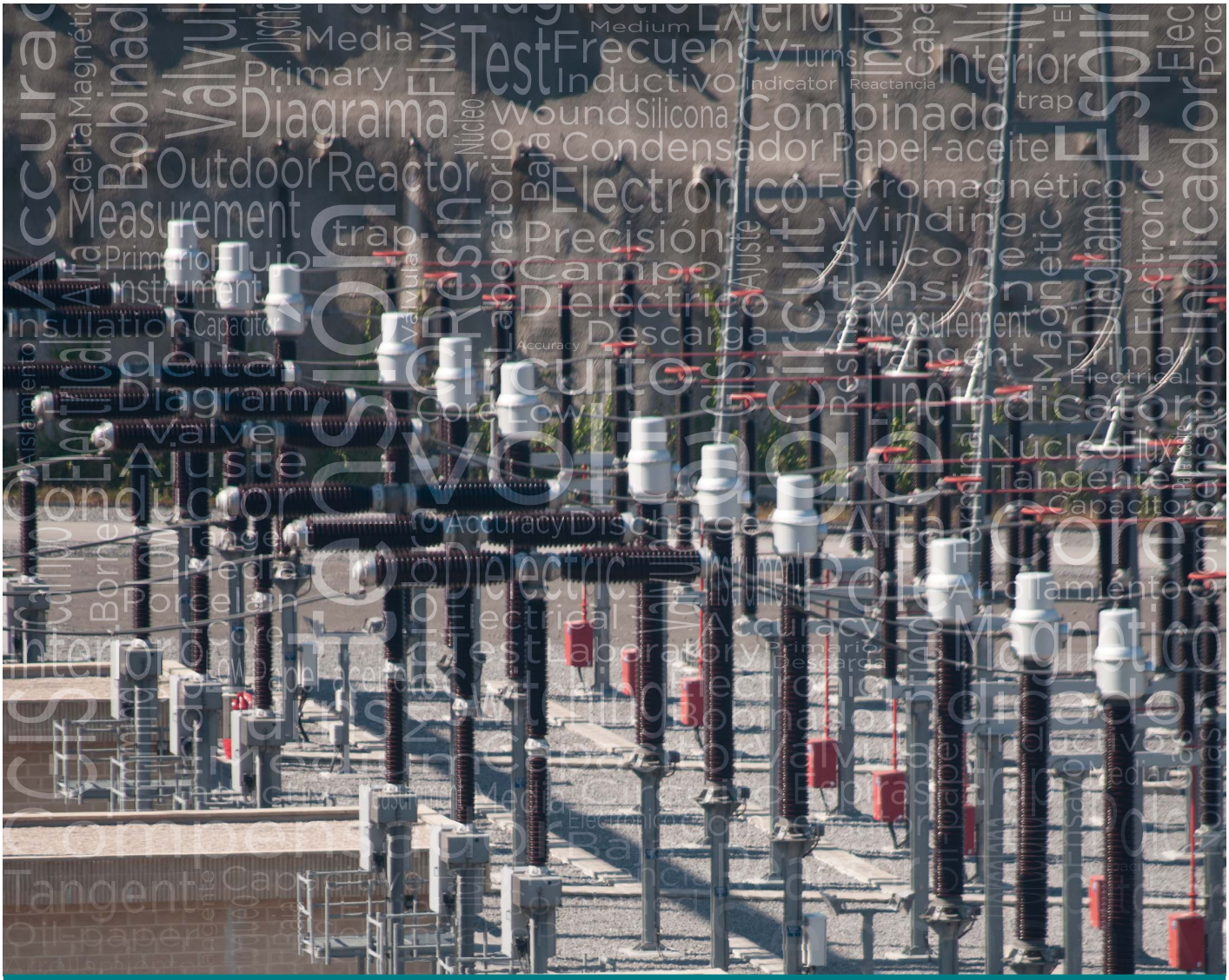

TRAINING BOOKLET: 5

The information in this document is subject to change. Contact ARTECHE to confirm the characteristics and availability of the products described here.

Ángel Enzunza

Moving together

CONTENTS

1. Electrical fields | 4

2. Calculation of electrical fields | 5
   - 2.1. Mathematical methods | 5
   - 2.2. Numerical methods | 5
   - 2.3. Experimental methods | 5

3. Charge method | 6

4. Electrical fields in instrument transformers | 7
   - 4.1. Medium voltage transformers | 7
   - 4.2. Equipotential rings in current transformers | 8
   - 4.3. High-voltage transformers | 8
   - 4.4. Special versions |9

5. Conclusions | 10

ABSTRACT

As any other electrical machine, instrument transformers are subjected to electrical fields. As long as these fields are controlled within acceptable limits, the transformers behave reliably.

Ways of determining electrical fields have been known for a long time, but they are either mathematical formulae applicable to highly specific shapes of electrodes or experimental methods which are difficult to extend to the shapes and sizes of real machines.

In recent years, the availability of powerful computers has led to the development of systems of calculation which can be applied to electrodes of any shape and size and different dielectrics with highly accurate results. This allows many alternative ways in making designs.

This paper is intended to show just a few examples of how one of these methods can be applied to the design of instrument transformers.

1. ELECTRIC FIELDS

The term "field" is used to describe an area in which there is some manifestation of energy: there are gravitational fields, thermal fields, magnetic fields, electrical fields, etc.

To learn what happens in an electrical field we must be aware of the concepts of flux and potential. Stating a parallelism with a gravitational field, these concepts are easily understood: the level curves correspond to equipotential lines and the slope curves to flux lines.

The fields which we have studied are stationary, i.e. independent of time.

These fields satisfy the conditions of Laplace's equation:

$$\nabla \varnothing = 0$$

The electrical field caused by alternating current may be considered as stationary, as physical phenomena such as the corona effect and flashover occur at a speed much higher than that of the variation in voltage. Fig. 1 shows these parameters (Kreuger).

Once Laplace's equation is solved, the function of the potential ø is known, along with the gradient or field intensity.

$$E = -\text{grad}\ \varnothing$$

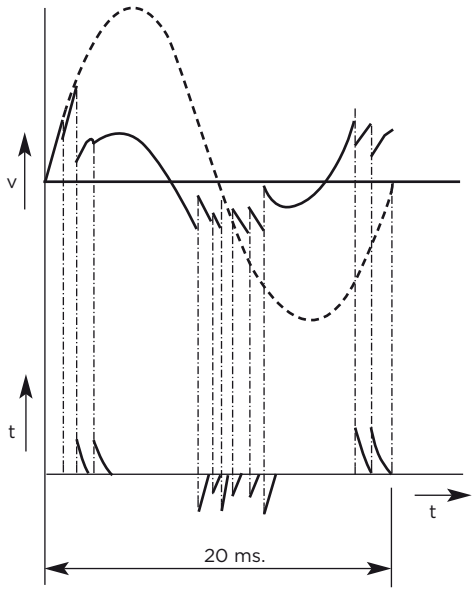

› Fig. 1

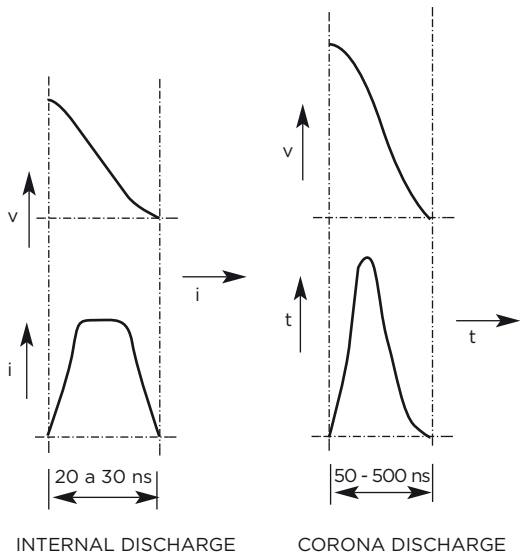

2. CALCULATION OF ELECTRICAL FIELDS

First let me briefly run through the different methods of calculation that exist:

2.1. MATHEMATICAL METHODS

- Conformal mapping.
- Coordinate transformation.

These methods are highly accurate but mathematically very complex to solve. They are therefore limited to electrodes with very special shapes.

2.2. NUMERICAL METHODS

- Finite differences.
- Montecarlo.
- Charge method.

These methods generally involve solving Laplace's equation in Taylor series, disregarding terms of a certain order depending on the degree of accuracy required. Computers are required to solve practical cases in all these methods.

2.3. EXPERIMENTAL METHODS

- Conductive paper.
- Electrolytic tank.
- Direct methods.
- Reticular methods.

These are simple, economical systems. They are not extremely accurate, but can be used at the initial trial and error stage of the design.

› Current (CX) and voltaje transformers (UT). 72,5 kV. REE (España)

3. CHARGE METHOD

This method is based on the assumption that the charges distributed over the surface of electrodes are located at a finite number of points or lines in those electrodes.

Since it is assumed that initial conditions are unaltered by the existence of an electrical field, once the figures for charge points or the density of the charge for linear charges is known, the potential and gradient anywhere within the space involved can be calculated.

This method was developed by Steinbigler and Weiss, and since its first appearance it has been improved and has become widely used (fig. 2).

The final figure for potential and gradient at a point is the algebraic sum of the potentials and gradients resulting from all the charges in the system. In matrix form this can be written as follows:

$$[A] . [Q] . = [P]$$

where A is the matrix of coefficients which are more or less complicated by which depend solely on geometrical magnitude, and P is the potential on the periphery of the electrodes, which is generally also known.

Therefore, what solely remains to calculate are the charges Q in order for the conditions to be satisfied.

Like all other numerical methods, this method requires a computer to solve it. The maximum number of charges used and the speed depend on it. Nowadays this does not pose any problems. When the charge method is applied to a problem of fields various errors may arise in the positioning or number of charges, etc.

There are checks, admitting some tolerance, to ensure that the system works correctly:

- check on potential at points on electrodes.
- electrode curvature.
- figure for the matrix of coefficients.
- figures for charges.

Once an adequate solution is worked out, we can go on to obtain field lines, gradients, etc.

Mathematical methods are more accurate than numerical methods, but in practice it is not usually possible to learn the formulae for the electrodes used, either because of their shape or connections, nearby walls, etc. have to be taken into account.

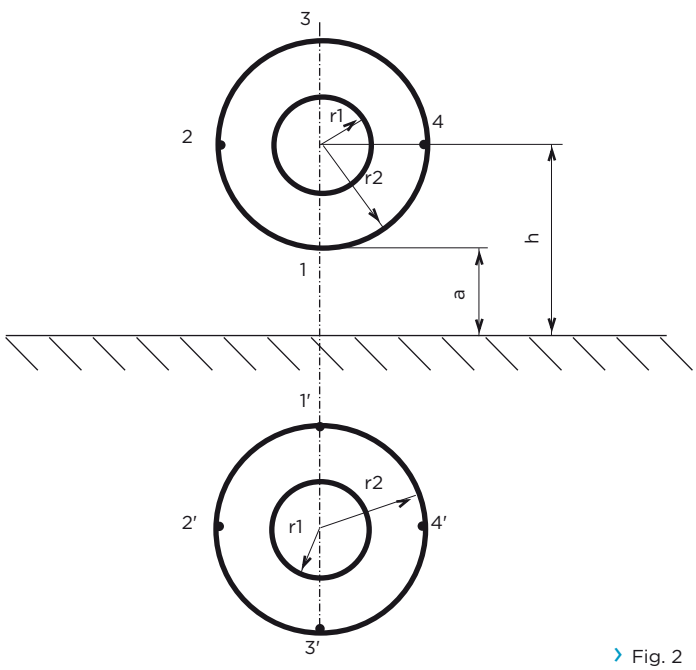

Fig. 2

4. ELECTRICAL FIELDS IN INSTRUMENT TRANSFORMERS

Below are various practical examples for the application of this method which have been developed and used at Arteche for the design and determination of the company's range of transformers.

The calculation method is obviously one more tool for design engineers, which supplements his own personal experience and figures of parameters obtained by laboratory and lifetime tests.

4.1. MEDIUM VOLTAGE TRANSFORMERS.

These units are relatively simple to make. A knowledge of electric fields and gradients in them helps to determine the thicknesses of their dielectrics, which are usually made of synthetic resin, as well as define the ideal outside shape of the transformer to prevent or reduce the effects of surface discharges over time (fig. 3).

The use of the programme with one or two dielectrics can give spectacular results in their dfferences.

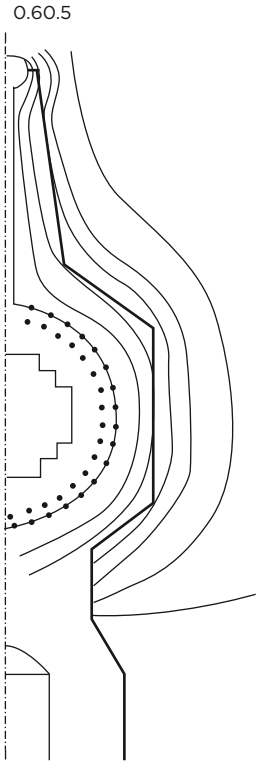

› Fig. 3

› Current transformers (CX) with equipotential rings.

4.2. EQUIPOTENTIAL RINGS IN CURRENT TRANSFORMERS.

In resin insulated outdoor transformers the problem of surface discharges is exacerbated by atmospheric pollution, moisture and other factors.

The surface of organic insulation subject to these phenomena and to an electrical field can decay in a relatively short time.

Fig. 4 shows the resolution of the charge programme for a transformer with a high voltage ring around its head and the old design without the ring.

In the old configuration on the left the resin head is subject to a surface gradient, while in the new transformer the electrical field is nul. This prevents the resin from decaying.

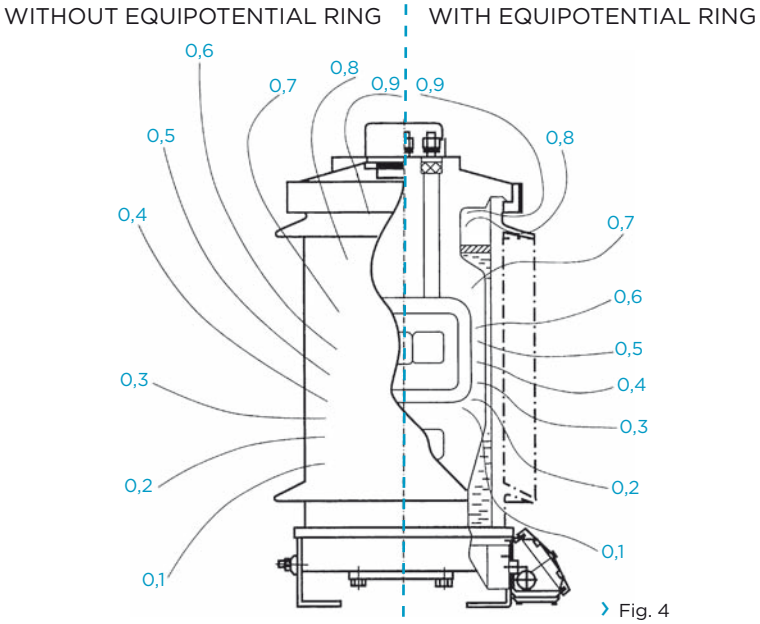

› Fig. 4

4.3. HIGH-VOLTAGE TRANSFORMERS.

Design problems multiply as voltage increases. The most widely used dielectrics are oil paper and porcelain in open air substations and SF6 gas and resin for shielded substations. The study of electrical fields can be widely applied in determining the shape of low voltage housings, core and secondary windings containers for current transformers, and in working out minimum thicknesses for insulation (fig. 5).

It can also be used in voltage transformers to design the high voltage electrode which surrounds the coils and to work out the thickness of the paper to be rebutted (fig. 6).

Another practical application is working out what voltage distribution terminals are to be used along the insulator and the height of the insulator itself.

Electrical fields are distributed differently depending on whether transformers are free-standing or on a support, and the height of the support. The figures for the axial gradient in the air drop by around 15% at a height of 2 m (fig. 7).

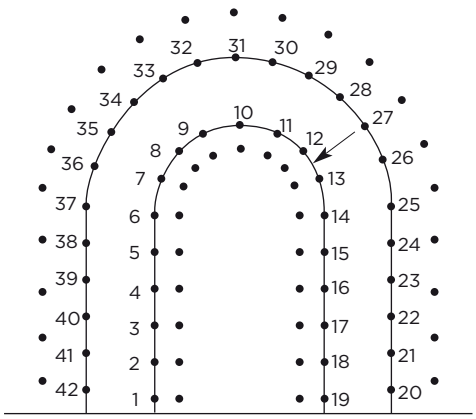

› Fig. 5

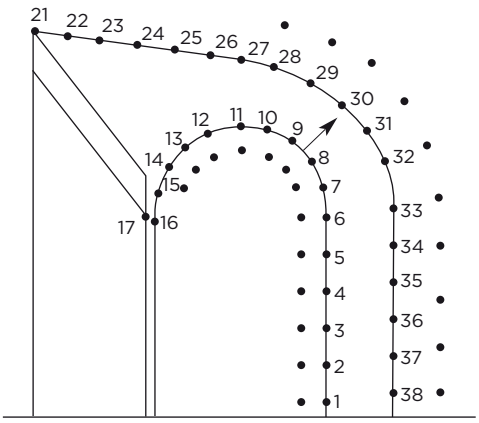

› Fig. 6

Through experiments it has been learned that the most dangerous section in terms of the likelihood of a discharge is the separation of the dielectrics.

The parameters to be monitored were worked out using this calculation method together with testing.

Average and maximum readings are always checked: average readings because they constitute a restrictive datum for the dielectric material used, and maximum readings because the high voltage section concentrates equipotential lines, producing gradient areas capable of causing local discharges which may lead to a total discharge.

The simulation of screen edges (µm in thickness) is highly complicated, and a great deal of experience is needed to extrapolate results.

It is curious to note that the same bushing behaves differently when positioned facing downwards (current transformer) that when it is facing upwards (voltage transformer).

Figures for gradients are higher in the former case (fig. 8).

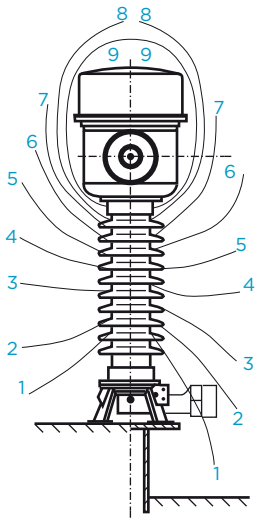

› Fig. 7

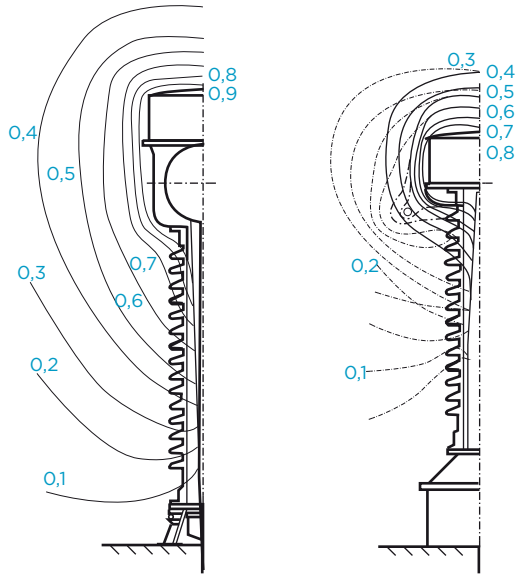

› Fig. 8

4.4. SPECIAL VERSIONS.

A highly characteristic example is the calculation of a very high voltage equipment for laboratories, where extreme care must be taken against corona effects so that high frequency tests can be carried out.

Fig. 9 shows the design of the outer shape of the high voltage dome of a 1000 kV testing transformer.

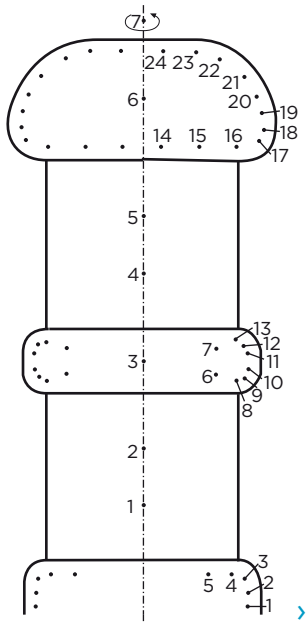

› Fig. 9

5. CONCLUSIONS

The advantages in the knowledge of electric fields in the design of instrument transformers are evident. The theoretical behaviour of a unit can be worked out beforehand, and the right size for the dielectrics can be determined, thus making a reliable industrial apparatus.

It should not be forgotten that the days of purely empirical, experimental designs for these machines are not far behind us.

The knowledge achieved by laboratory tests, accelerated aging and service experience, of the behaviour of insulating materials and of the many factors which influence that behaviour, such as thickness, pressure, temperature, electrode material, wave forms, etc., together with an adecuate use of the calculation of electrical field are essential to obtain appropiate and reliable instrument transformers.

arteche
Moving together