arteche

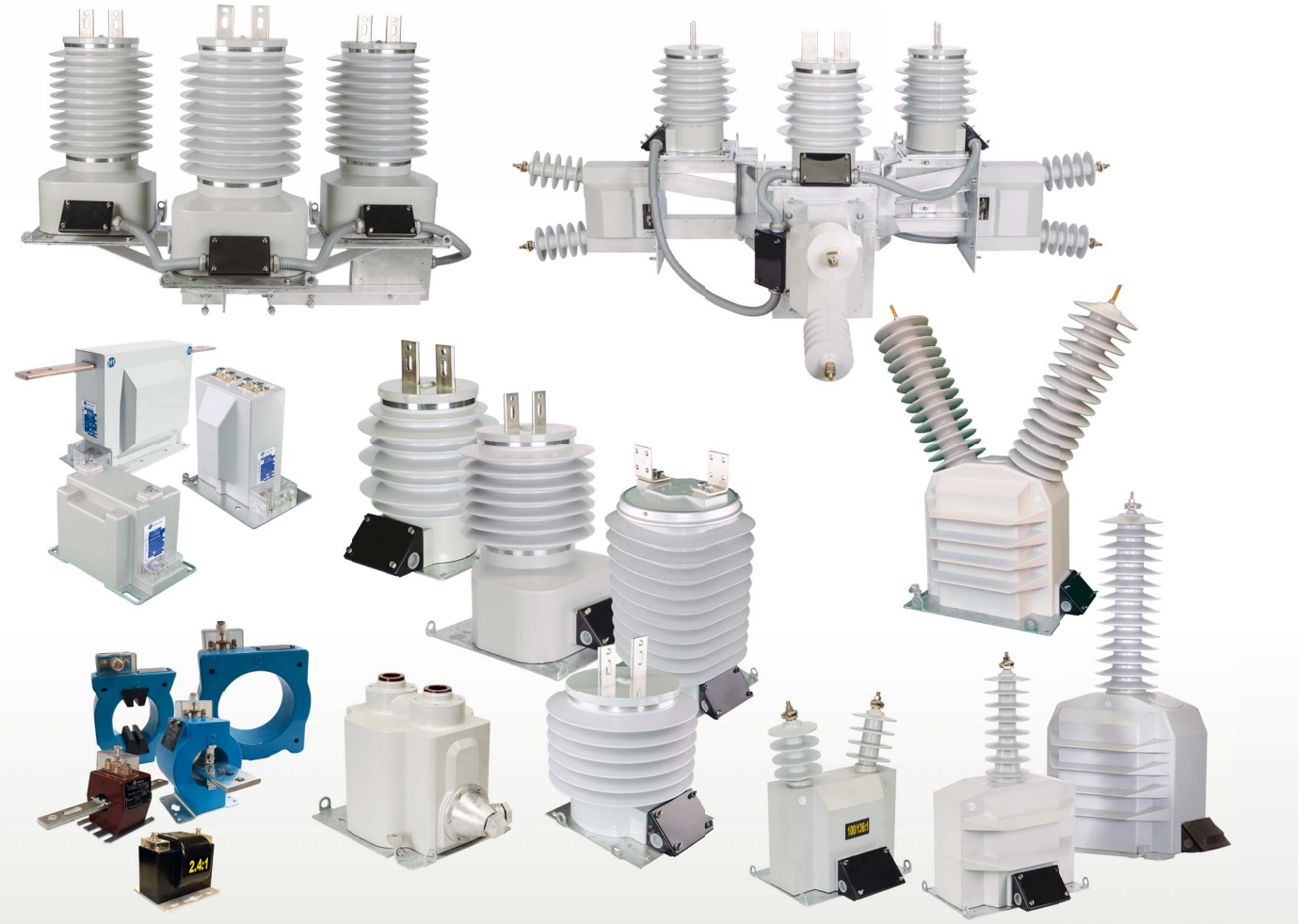

REFERENCE GUIDE

INSTRUMENT TRANSFORMERS

INDOOR / OUTDOOR
CAST RESIN CONSTRUCTION

Updates available at:
www.arteche.com/unitusa

CONTENTS

The instrument transformers listed in this guide are the most common for the electrical utilities and industries. ARTECHE has a much wider range of characteristics and models. For any different detail than the ones listed, please contact ARTECHE or your local representative/distributor.

GENERAL TECHNICAL DATA

600 V INSTRUMENT TRANSFORMERS

5 kV – 34.5 kV INDOOR INSTRUMENT TRANSFORMERS

5 kV – 69 kV OUTDOOR INSTRUMENT TRANSFORMERS & METERING UNITS

arteche

GENERAL TECHNICAL DATA

APPLICATION DATA

INTRODUCTION

The Purpose of instrument transformers:

- The purpose of instrument transformers is to reduce the voltage and current of an electrical network to standardized, non-hazardous levels.
- They isolate operators and instruments from the high voltage circuits allowing a less hazardous work environment. Without these transformers, measurements would require expensive insulated instrument panels.

There are two types of instrument transformer:

- Current transformers (CT): Under normal operating conditions their secondary current is practically proportional to the primary current, and its phase is shifted by an angle close to zero.
- Voltage transformers (VT): Under normal operating conditions the secondary voltage is practically proportional to the primary voltage and its phase is shifted by an angle close to zero.

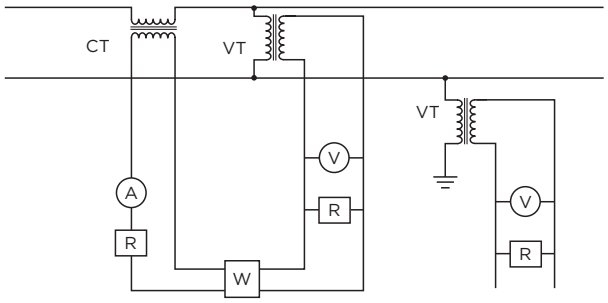

- Figure 1: CT and VT diagram connection

VT VOLTAGE DESIGNATIONS

Single-phase Voltage transformers (UR/UC/UX)

The "U" in the type name and the "GY" in the primary voltage column of the data sheet indicate that the VT has one fully insulated bushing, making it suitable for line-to-ground connection only.

- **40250/69000GY.** This unit is rated for 40250 operating Volts. It can be connected at 40250 Volts line-to-ground on a 69000 Volt system (line-to-line Volts are 69000 V).
- **34500/34500GY.** This unit is rated for 34500 operating Volts. However, it can only be connected line-to-ground on a 34500 V system. Therefore, the actual operating voltage of the unit would be 34500/√3. The accuracy and thermal ratings of this unit are based on 34500 V. This is typical where there is a relay connected to the unit which should operate when there is a single line-to-ground fault. In this condition, the line-to-ground voltage becomes equal to the line-to-line voltage.

Phase-to-phase Voltage transformers (VR/VC/VX)

The "V" in the type name and the "Y" in the primary voltage column of the data sheet indicate that the VT has two fully insulated bushings, making it suitable for line-to-line connection.

- **27600/47804Y.** This unit is rated for 27600 operating Volts. It can be connected at 27600 Volts line-to-ground on a 47804 Volt system (line-to-line Volts are 47804 V) OR it can be connected line-to-line on a system with 27600 V line-to-line. This unit is not suitable for operation at 47804 Volts.
- **46000/46000Y**. This unit is rated for 46000 operating Volts. It can be connected at 46000 Volts line-to-line.

RATING FACTORS

Rating factors given in this brochure are standard at 30°C Characteristics for different thermal loadings on request.

STANDARDS

All the instrument transformers listed in this guide comply with the following standards where applicable:

- IEEE C57.13–2016. Standard Requirements for Instrument transformers.
- ANSI C12.11-2007. American National Standard for Instrument transformers for Revenue Metering 10kV BIL through 350 kV BIL (0.6 kV NSV through 69 kV NSV).
- CAN/CSA-C60044. Instrument Transformers.
- IEC 61869. Instrument Transformers.

HOW TO SPECIFY INSTRUMENT TRANSFORMERS

There are several parameters that must be specified when ordering or requesting for proposals or quotations. If the requirements needed fits exactly into the characteristics listed in the data sheets of each model, it is enough to mention the code. However, when non-standard equipment will be needed, the following parameters must be specified:

- Highest nominal voltage system
- Basic impulse level (BIL)
- Type of service (outdoor/indoor)
- Frequency
- Ratio

Only for current transformers

- Continuous thermal current rating factor
- Short-time thermal current (kA/1s)
- Class and burden

Only for voltage transformers

- Rated continuous voltage
- Rated voltage factor (30sec)
- Total thermal burden
- Accuracy class and burden

ACCURACY STANDARDS

CURRENT TRANSFORMERS (CT)

The accuracy class of a current transformer for measuring is given by a number (class rate) representing the ratio error limit expressed as a percentage of the rated primary current when the transformer is running at its "accuracy load".

Accuracy classes for current transformers are: 0.15S; 0.15; 0.15N; 0.3S; 0.3; 0.6 and 1.2. For Accuracy class 0.3, 0.6, 0.15N and 1.2 the ratio correction factor must fall within the parallelograms for 100% and 10% respectively. For accuracy class 0.15, 0.15S and 0.3S the ratio correction factor must fall within the parallelograms for 100% and 5% respectively.

The following example calculates the correction factor for a current transformer with the following characteristics:

- 0.3 accuracy class
- 100% rated current
- Ratio correction factor: 1.003
- Maximum allowable phase angle: +15.6 minutes

Transformer Correction Factor = RCF – (β/2600) = 1.003-(15.6/2600) = **0.997**

The ratio correction factor and phase angle for any point inside the 0.3 class parallelogram for 100% rated current will always produce a TCF between 0.997 and 1.003.

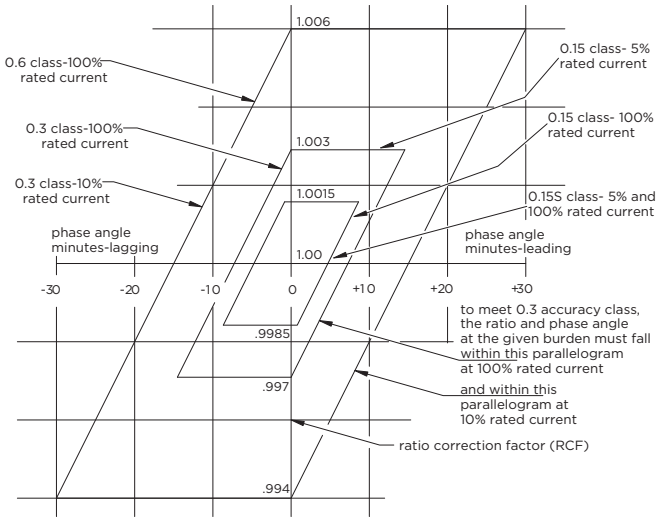

› Figure 2: CT Equivalent Parallelogram.

VOLTAGE TRANSFORMERS (VT)

The accuracy class of a voltage transformer for measuring is given by a number (class rate) representing the ratio error limit expressed as a percentage of the rated primary voltage when the transformer is running at its "accuracy load".

Accuracy classes for voltage transformers are: 0.15; 0.3; 0.6 and 1.2.

The following example calculates the correction factor for a voltage transformer with the following characteristics:

- 0.3 accuracy class
- 100% rated voltage
- Ratio correction factor: 1.003
- Maximum allowable phase angle: -15.6 minutes

Transformer Correction Factor = RCF + (γ/2600) = **1.003 + (-15.6/2600) = 0.997**

The ratio correction factor and phase angle for any point inside the 0.3 class parallelogram, will always produce a TCF between 0.997 and 1.003.

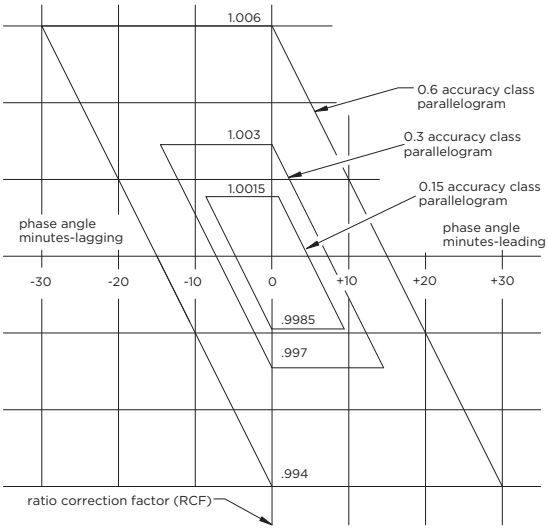

› Figure 3: VT Equivalent Parallelogram.

ACCURACY STANDARDS

HIGH ACCURACY EXTENDED RANGE CURRENT TRANSFORMERS

Extended range current transformers are designed for modern power generation systems. They accurately measure a wider range of current without making physical changes in the primary or in the secondary connections of a current transformer.

To ensure the best performance on nominal primary current readings from 1% to Rating factor (please, see charts below), these current transformers have been designed using magnetic materials that minimize excitation losses and a winding distribution that virtually eliminates stray losses.

High accuracy extended range current transformers can increase utility revenue through improved metering. This occurs on systems with variable currents such as wind or solar power generation. In the past, current transformers were designed to accurately measure down to 10% of the current rating on the name plate of the transformer.

However, the recent deployment of variable generation has created a need to accurately measure a new range of currents produced by these systems; especially below the rated current of the transformer.

Historically, some energy usage revenue went unmeasured. Today Arteche's high accuracy extended range current transformers accurately measure these variable loads.

Extended range current transformers answer "Standard CT's problem" by expanding the amperage load that can be accurately measured. The wider current range helps to reduce the number of different ratios, reducing the amount of inventory needed to respond to customer demands.

› **"Standard Class 0.3"** means that from 100% of nominal current through the rating factor, accuracy is guaranteed to be ±0.3%, and from 10% of nominal current through 100% of nominal current accuracy is guaranteed to be ±0.6%.

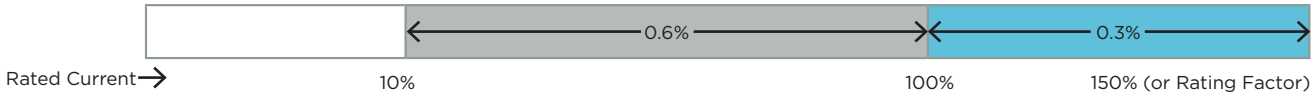

› **"High Accuracy Class 0.15"** means that from 100% of nominal current through the rating factor, accuracy is guaranteed to be ±0.15%, and from 5% of nominal current through 100% of nominal current accuracy is guaranteed to be ±0.3%.

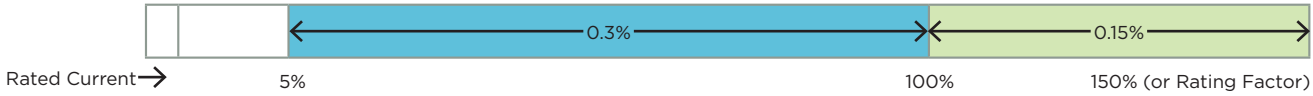

› **"Accuracy Class 0.3S"** means that from 5% of nominal current through the rating factor, accuracy is guaranteed to be ±0.3%.

› **"Accuracy Class 0.15S"** means that from 5% of nominal current through the rating factor, accuracy is guaranteed to be ±0.15%.

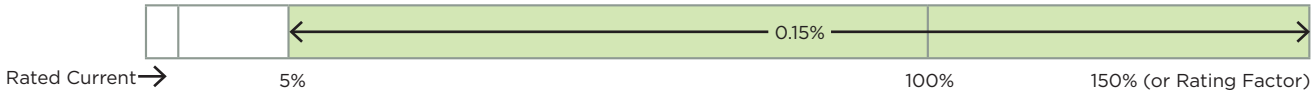

› **"High Accuracy, Extended Range Class 0.15"** means that from 1% of nominal current through the rating factor, accuracy is guaranteed to be ±0.15%. This goes beyond IEEE C57.13 requirements.

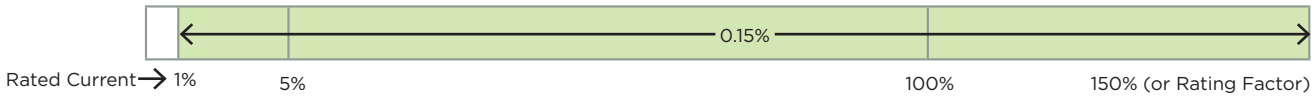

OTHER INFORMATION

CURRENT TRANSFORMERS

Standard burden characteristics @ 60Hz and 5Amps secondary					
Burden designation	Resistance (ohms)	Inductance (millihenrys)	Impedance (ohms)	Volt-Amperes	Power factor
METERING BURDENS					
B-0.1	0.09	0.116	0.1	2.5	1.0
B-0.2	0.18	0.232	0.2	5.0	0.9
B-05	0.45	0.580	0.5	12.5	0.9
B-0.9	0.81	1.040	0.9	22.5	0.9
B-1.8	1.62	2.080	1.8	45.0	0.9
RELAYING BURDENS					
B-1	0.5	2.3	1.0	25	0.5
B-2	1.0	4.6	2.0	50	0.5
B-4	2.0	9.2	4.0	100	0.5
B-8	4.0	18.5	8.0	200	0.5

As per IEEE C57.13-2016, tables 10 and 13.

VOLTAGE TRANSFORMERS

Standard burden @ 60Hz		
Burden designation	Secondary Volt-Amperes	Burden Power Factor
W	12.5	0.10
X	25.0	0.70
M	35.0	0.20
Y	75.0	0.85
Z	200.0	0.85
ZZ	400.0	0.85

As per IEEE C57.13-2016, table 19.

CROSS REFERENCE OF MOST COMMONLY USED TYPES

INDOOR

Current transformer				Voltage transformer			
ARTECHE	GE	ABB	KUHLMAN	ARTECHE	GE	ABB	KUHLMAN
CID-17	JKM-5,5A	KIR-11	CID-17	U/VCE-17	JVM-4,5	VIZ-11	U/VCD-17

OUTDOOR

Current transformer				Voltage transformer			
ARTECHE	GE	ABB	KUHLMAN	ARTECHE	GE	ABB	KUHLMAN
CRB-17	JCK-5	KOR-11	BB-15-972	VRL-17	JVW-3	VOY-60	PTT-110-977
CRE-17	JKW-3,4	KOR-60,75	BB-15-971 & BB-15-971H	URJ-17	JVW-4,5	VOZ-75	PTT-110-9710G
				VRJ-17	JVW-4,5	VOZ-75	PTT-110-9710
CRE-24	JKW-6	KON-12	BB-25-974	URN-17	JVW-6	VOG-12	PTT-150-9710G
CRF-24	JKW-6	KOR-15C	BB-25-973 & BB-25-973H	VRN-17	JVW-4,5	VOZ-75	PTT-110-9710
				URN-24	JVW-6	VOY-15G	PTT-150-9710G
CRF-36	JKW-7	KOR-20	BB-34-975 & BB-34-976	VRN-24	JVW-6	VOY-15	PTT-150-9710
				URS-36	JVW-7	VOY-20G	PTT-200-9710G
CE-034-E2	JKW-150,200	KOTD-150,200	LG(X)	VRS-36	JVW-7C	VOY-20	PTT-200-9710
				URU-52	JVS-250	VOZZ-25G	--
CE-046-E2	JKW-250	KOTD-250	CE-046	VRU-52	JVT-250	VOZZ-25	--
CE-069-E2	JKW-350	--	CE-069	URU-72	JVS-350	--	--

arteche

OTHER INFORMATION

IT TYPE DESIGNATIONS

	ARTECHE Design	1st position	2nd position	3rd position*	4th&5th position
5kV - 36kV					
CT's Indoor	ACA-36	A=CT Indoor transformer Up to 36 kV with DIN standard	C=insulation of resin	A=0.3 B0.1 up to B0.5	Insulation class: 12=8.7/26/75 kV 17=15/34/110 kV 24=25/50/150 kV 36=34.5/70/200 kV
	ACD-12, ACD-17, ACD-24			D=0.3 B0.1 up To B0.9 depending on the ratio	
	ACI-17			I=0.3 B0.5 up To B0.9 depending on the ratio	
	ACH-17, ACH-24			H=0.3 B0.5 up To B1.8 depending on the ratio	
	ACF-36			F=burden B0.5 up To B1.8 depending on the ratio	
	AGPE-12	A=CT Indoor transformer Up to 36 kV toroidal	G=insulation resin, window type	P=Burden B0.1 up to B1.8 C-200	E= indoor & outdoor service 12=8.7/26/75 kV
	CID-17	C=CT Indoor up to 34.5 kV only for America	I=insulation and molded in resin	D=0.3 B1.8 C-200	
VT's Indoor	VCE-7, VCE-17	V=Line To Line connection U=line to ground connection	C=insulation and molded in resin. X=insulation and molded in resin with relief valve	Accuracy and burden: E=0.3WX, 0.3WXY	Insulation class: 12=8.7/26/75 kV 17=15/34/110 kV 24=25/50/150 kV 36=34.5/70/200 kV 52=46/95/250 kV 72=69/140/350 kV
	UCE-7, VCE-7				
	UXI-12			Accuracy and burden: I,L,J,N=0.3WXY	
	UCI-17				
	VCL-17, VCL-24				
	UXL-17 UXL-24				
	UCJ-24				
	VCN-36				
	UXN-36				
	UEI-24	U=line to ground connection	E=Insulation and molded in resin with metal coated body	I=0,3WXY	24=25/50/150 kV
5kV - 72kV					
CT's Outdoor	CRB-17	C=CT Outdoor up to 69 kV, post type	R=insulation of cycloaliphatic resin	B=0.3B0.5	Insulation class: 17=15/34/110 kV 24=25/50/150 kV 36=34.5/70/200 kV 52=46/95/250 kV 72=69/140/350 kV
	CRE-17, CRE-24			E=0.3B1.8 T-150	
	CRF-24, CRF-36			F=0.3B1.8 T-200	
	CRH-36, CRH-52, CRH-72			H=0.3B1.8 T-200	
	CRK-36, CRK-52, CRK-72			K=0.3B1.8 T-400	
	CE-034-E2	C=CT Outdoor up to 69 kV, top-core with metal coated head	E=Insulation of cycloaliphatic resin and top-core with metal coated head	3rd,4th&5th position	6th position
	CE-046-E2			Insulation level: 034= 34.5/70/200 kV 046= 46/95/250 kV 069= 69/140/350 kV	Accuracy and burden E2=0.3B1.8 T-400
	CE-069-E2				
VT's outdoor	VRL-17	V=line To Line connection U=line to ground connection	R=insulation Of cycloaliphatic resin	Accuracy and burden L,J,N,S=0.3WXY	Insulation class: 17= 15/34/110 kV 24=25/50/150 kV 36=34.5/70/200 kV
	URL-17				
	VRJ-17, VRJ-24				
	URJ-17				
	VRN-17, VRN-24				
	URN-17, URN-24				
	VRS-36				
	URS-36				
	VRU-52			U=0.3WXYZ	52=46/95/250 kV 72=69/140/350 kV
	URU-52				
	URU-72				

*The letter in the 3rd position is the size of the CT, each letter means a different size, increasing the size in alphabetical order.

arteche

600 V INSTRUMENT TRANSFORMERS

IRH-1

600 V CURRENT TRANSFORMER

INDOOR
60 Hertz

ARTECHE IRH series are dry type indoor/outdoor service current transformers. The core is encapsulated with epoxy resin which provides excellent internal dielectric properties and mechanical strength, ensuring a long mechanical and electrical life. The transformer is maintenance free.

The core is built with high permeability grain oriented silicon steel laminations for low losses. The windings are copper wire with copper plate double isolation. The concentric distribution of the coils prevents magnetic flux leakage, achieving greater accuracy and higher capacity to withstand mechanical stresses in adverse operating conditions.

Mechanical characteristics		
Insulation Material	Color	Weight (lbs.)
Resin	Brown / Blue	Window Type: 5 / Primary Bar Type: 7.3

Window Type:

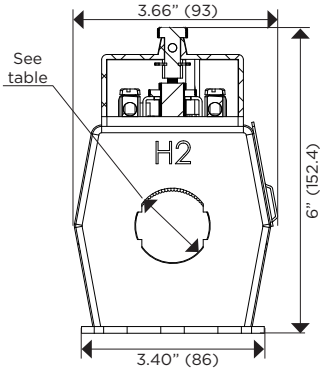

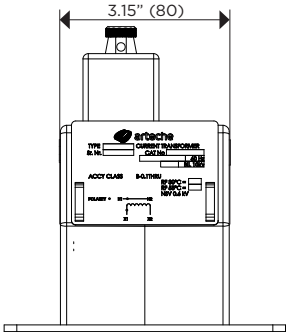

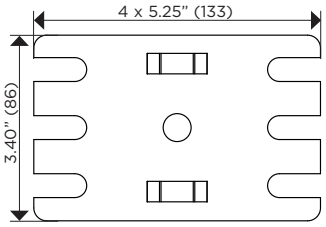

Drawing number: 4287699

Primary Bar Type:

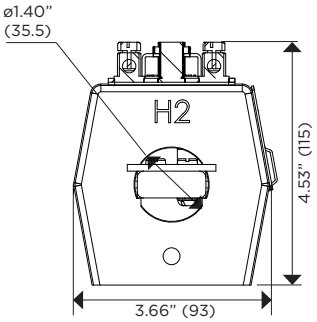

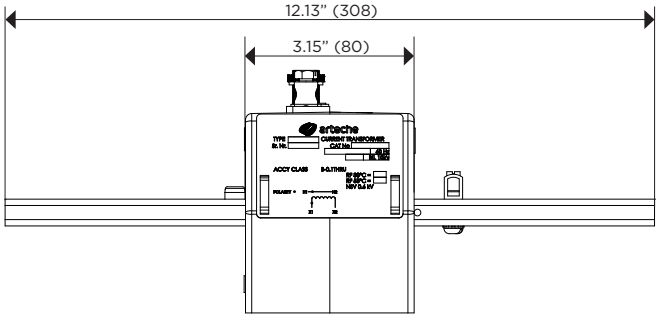

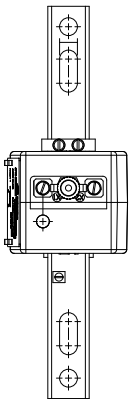

Drawing number: 4287759

	ONE SECONDARY		PRIMARY TERMINAL	SECONDARY TERMINALS AND SHORT CIRCUIT DEVICE
MARKING (Single Primary Ratio)	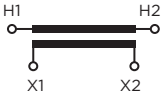	CONNEC-TIONS	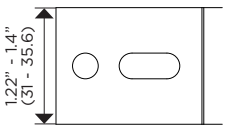 Type: NEMA2 Material: Copper	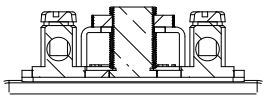 Secondary terminals. Type: Quick Connector Material: Brass Diameter: 1/4"

Approximate dimensions in inches (mm).

IRH-1

600 V CURRENT TRANSFORMER

Electrical characteristics

Window type		Primary Bar Type		Window Size	Current Ratio (Primary: Secondary) (A)	Continuous Thermal Current Rating Factor @ 30°C	Continuous Thermal Current Rating Factor @ 55°C	IEEE Metering Accuracy
No Base	Low Base	No Base	Low Base					
735220000	735221040	-	-	1.5″	200:5	3.0	2.0	0.3 B0.2
735220001	735221060	-	-	1.5″	300:5	2.0	1.5	0.3 B0.2
735220002	735221080	-	-	2.0″	400:5	2.0	1.5	0.3 B0.2
735220003	735221120	-	-	2.0″	600:5	1.5	1.2	0.3 B0.2
-	-	735220060	735225020	1.22″	100:5	4.0	3.0	0.3 B0.2
-	-	735220061	735225040	1.22″	200:5	3.0	2.0	0.3 B0.2
-	-	735220062	735225045	1.22″	200:5	2.0	1.5	0.3 B0.5
-	-	735220063	735225060	1.22″	300:5	2.0	1.5	0.3 B0.5
-	-	735220064	735225080	1.4″	400:5	2.0	1.5	0.3 B0.5
-	-	735220065	735225100	1.4″	500:5	2.0	1.5	0.3 B0.5
-	-	735220066	735225120	1.4″	600:5	2.0	1.5	0.3 B0.5
-	-	735220067	735225160	1.4″	800:5	1.5	1.2	0.3 B0.5
High Accuracy Extended Range 5% nominal current to Rating Factor								
735220030	735227120	735220090	735228120	1.4″	600:5	2.0	1.5	0.15SB0.2

Additional ratings available upon request.

Notes:

IRH-3

600 V CURRENT TRANSFORMER

INDOOR-OUTDOOR
60 Hertz

ARTECHE IRH series are dry type indoor/outdoor service current transformers. The core is encapsulated with epoxy resin which provides excellent internal dielectric properties and mechanical strength, ensuring a long mechanical and electrical life. The transformer is maintenance free.

The core is built with high permeability grain oriented silicon steel laminations for low losses. The windings are copper wire with copper plate double isolation. The concentric distribution of the coils prevents magnetic flux leakage, achieving greater accuracy and higher capacity to withstand mechanical stresses in adverse operating conditions.

Mechanical characteristics		
Insulation Material	Color	Weight (lbs.)
Resin	Blue	8.8

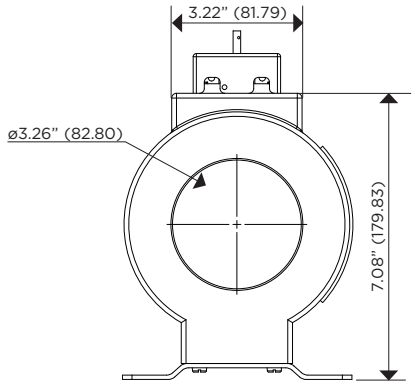

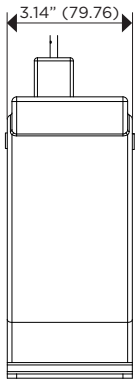

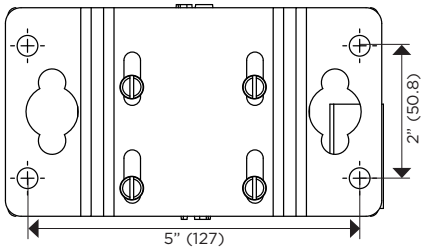

Drawing number: 4286166

	ONE SECONDARY		SECONDARY TERMINALS AND SHORT CIRCUIT DEVICE
MARKING (Single Primary Ratio)	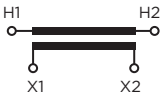	CONNEC-TIONS	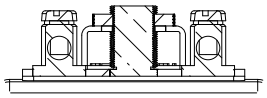 Secondary terminals. Type: Quick Connector Material: Brass Diameter: 1/4"

Approximate dimensions in inches (mm).

IRH-3

600 V CURRENT TRANSFORMER

Electrical characteristics					
Code	Current Ratio (Primary: Secondary) (A)	Continuous Thermal Current Rating Factor @ 30°C	Continuous Thermal Current Rating Factor @ 55°C	IEEE Metering Accuracy	Relay Accuracy
735261060	300:5	1.2	1.0	0.6B0.1/1.2B0.2	-
735261080	400:5	1.2	1.0	0.6B0.2/1.2B0.5	-
735261100	500:5	1.2	1.0	0.6B0.5	-
735261120	600:5	1.2	1.0	0.3B0.1/0.6B1.0	-
735261160	800:5	1.2	1.0	0.3B0.2/0.6B1.0	C-10
735261200	1000:5	1.2	1.0	0.3B0.5/0.6B2.0	C-10
735261240	1200:5	1.2	1.0	0.3B0.5/0.6B2.0	C-10

Additional ratings available upon request.

Notes:

IRH-5

600 V CURRENT TRANSFORMER

INDOOR-
OUTDOOR
60 Hertz

UL Recognized Component

ARTECHE IRH series are dry type indoor/outdoor service current transformers. The core is encapsulated with epoxy resin which provides excellent internal dielectric properties and mechanical strength, ensuring a long mechanical and electrical life. The transformer is maintenance free.

The core is built with high permeability grain oriented silicon steel laminations for low losses. The windings are copper wire with copper plate double isolation. The concentric distribution of the coils prevents magnetic flux leakage, achieving greater accuracy and higher capacity to withstand mechanical stresses in adverse operating conditions.

Mechanical characteristics		
Insulation Material	Color	Weight (lbs.)
Resin	Blue	Window Type: 10/12 / Primary Bar Type: 15

Window Type:

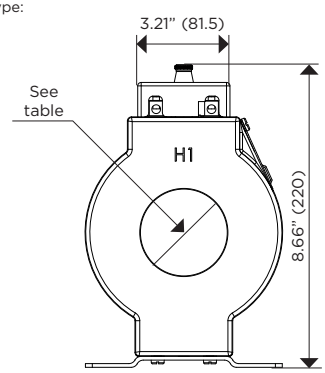

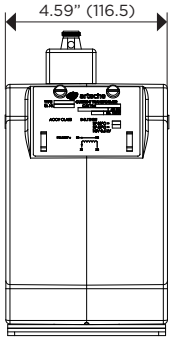

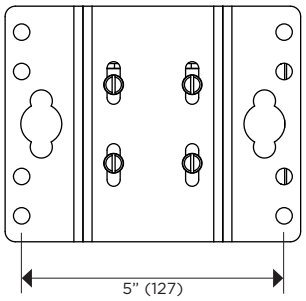

Drawing number: 4287171

Primary Bar Type:

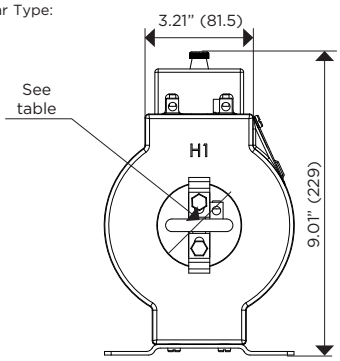

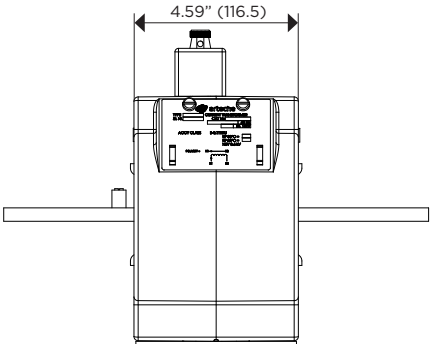

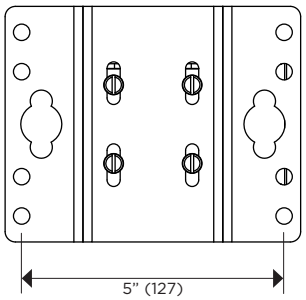

Drawing number: 4287182

	ONE SECONDARY	ONE SECONDARY with tap
MARKING (Single Primary Ratio)	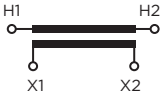	

	PRIMARY TERMINAL	SECONDARY TERMINALS AND SHORT CIRCUIT DEVICE
CONNECTIONS	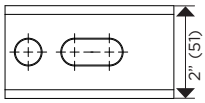 Type: NEMA2 Material: Copper	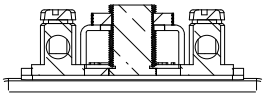 Secondary terminals. Type: Quick Connector Material: Brass Diameter: 1/4"

Approximate dimensions in inches (mm).

IRH-5

600 V CURRENT TRANSFORMER

Electrical characteristics

Window type		Nema 2 Bar Type		Nema 4 Bar Type		Window Size	Current Ratio (Primary: Secondary) (A)	Continuous Thermal Current Rating Factor @ 30°C	Continuous Thermal Current Rating Factor @ 55°C	IEEE Metering Accuracy	Relay Accuracy
No Base	Low Base	No Base	Low Base	No Base	Low Base						
735300060	735301010	735300100	735305010	735300140	735300000	2.56″	50:5	4.0	3.0	1.2 B0.1	-
735300061	735301020	735300101	735305020	735300141	735300001	2.56″	100:5	4.0	3.0	0.3 B0.1	C-10
735300062	735301040	735300102	735305040	735300142	735300002	2.56″	200:5	4.0	3.0	0.3 B0.5	C-30
735300063	735301060	735300103	735305060	735300143	735300003	3.15″	300:5	4.0	3.0	0.3 B0.5	C-30
735300064	735301080	735300104	735305080	735300144	735300004	3.15″	400:5	4.0	3.0	0.3 B0.5	C-30
735300065	735301100	735300105	735305100	735300145	735300005	3.15″	500:5	3.0	2.2	0.3 B0.5	C-30
735300066	735301120	735300106	735305120	735300146	735300006	3.15″	600:5	2.0	1.5	0.3 B0.5	C-30
735300067	735301160	735300107	735305160	735300147	735300007	3.15″	800:5	2.0	1.5	0.3 B0.5	C-20
735300068	735301200	735300108	735305200	735300148	735300008	3.15″	1000:5	2.0	1.5	0.3 B0.5	C-30
735300069	735301240	735300109	735305240	735300149	735300009	3.15″	1200:5	1.5	1.2	0.3 B1.8	C-30
735300180	735302040	735300220	735306040	735300260	735300020	3.15″	200/400:5	4.0 / 2.0	3.0 / 1.5	0.3 B0.2 / 0.3 B0.5	C-30 / C-50
735300181	735302060	735300221	735306060	735300261	735300021	3.15″	300/600:5	3.0 / 2.0	2.2 / 1.5	0.3 B0.2 / 0.3 B0.5	C-20 / C-40
735300182	735302080	735300222	735306080	735300262	735300022	3.15″	400/800:5	2.0 / 2.0	1.5 / 1.5	0.3 B0.2 / 0.3 B0.5	C-10 / C-30
High Accuracy Extended Range 5% nominal current to Rating Factor											
735300300	735307120	735300340	735308120	735300380	735300040	3.15″	600:5	2.0	1.5	0.15S B0.5	-
735300301	735300120	735300341	735309120	735300381	735300041	3.15″	600:5	3.0	2.0	0.15S B0.2	-
735300302	735307200	735300342	735308200	735300382	735300042	3.15″	1000:5	2	1.5	0.15S B0.5	-

Additional ratings available upon request.

Notes:

IRH-7

600 V CURRENT TRANSFORMER

ARTECHE IRH series are dry type indoor/outdoor service current transformers. The core is encapsulated with epoxy resin which provides excellent internal dielectric properties and mechanical strength, ensuring a long mechanical and electrical life. The transformer is maintenance free.

The core is built with high permeability grain oriented silicon steel laminations for low losses. The windings are copper wire with copper plate double isolation. The concentric distribution of the coils prevents magnetic flux leakage, achieving greater accuracy and higher capacity to withstand mechanical stresses in adverse operating conditions.

UL Recognized Component

INDOOR-
OUTDOOR
60 Hertz

Mechanical characteristics		
Insulation Material	Color	Weight (lbs.)
Resin	Blue	Tapered Type: 7.5 / Wide Type: 8.5

Tapered Type:

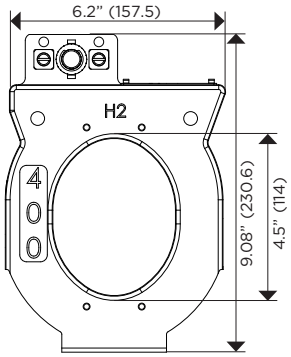

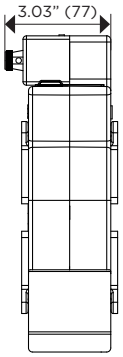

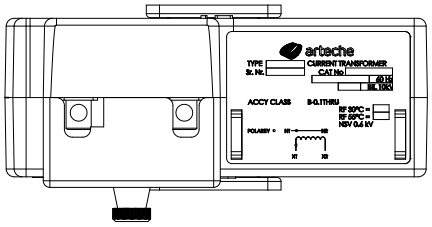

Drawing number: 4287265

Wide Type:

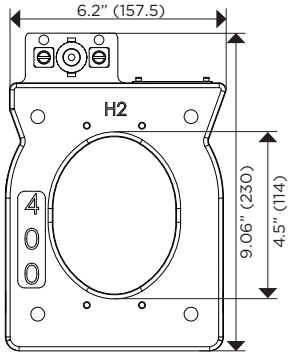

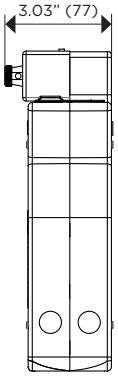

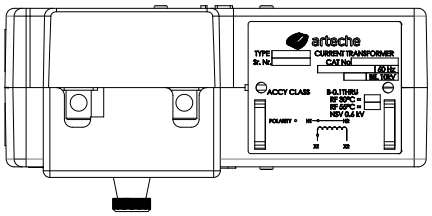

Drawing number: 4287356

	ONE SECONDARY		SECONDARY TERMINALS AND SHORT CIRCUIT DEVICE
MARKING (Single Primary Ratio)	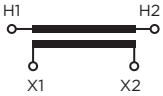	CONNEC-TIONS	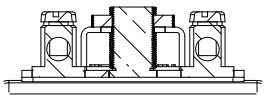 Secondary terminals. Type: Quick Connector Material: Brass Diameter: 1/4"

Approximate dimensions in inches.

IRH-7

600 V CURRENT TRANSFORMER

Electrical characteristics						
Code (Tapered type)	Code (Wide type)	Current Ratio (Primary: Secondary) (A)	Continuous Thermal Current Rating Factor @ 30°C	Continuous Thermal Current Rating Factor @ 55°C	IEEE Metering Accuracy	Relay Accuracy
735323020	735324020	100:5	4.0	3.0	1.2 B0.1	-
735323040	735324040	200:5	4.0	3.0	0.3 B0.1	C-10
735323060	735324060	300:5	4.0	3.0	0.3 B0.2	C-20
735323080	735324080	400:5	4.0	3.0	0.3 B0.2	C-20
735323100	735324100	500:5	3.0	2.2	0.3 B0.5	C-20
735323120	735324120	600:5	3.0	2.2	0.3 B0.5	C-20
735323160	735324160	800:5	3.0	2.2	0.3 B0.5	C-20
735323200	735324200	1000:5	2.0	1.5	0.3 B0.5	C-30
735323240	735324240	1200:5	2.0	1.5	0.3 B0.9	C-30
735323300	735324300	1500:5	2.0	1.5	0.3 B0.9	C-50
735323400	735324400	2000:5	1.5	1.2	0.3 B1.8	C-20
735323600	735324600	3000:5	1.3	1.0	0.3 B1.8	C-20
735323800	735324800	4000:5	1.0	0.75	0.3 B1.8	C-10
High Accuracy Extended Range 5% nominal current to Rating Factor						
735327100	735328100	500:5	2.0	1.5	0.15S B0.2	-
735327200	735328200	1000:5	2.0	1.5	0.15S B0.5	-
735327400	735328400	2000:5	2.0	1.5	0.15S B0.5	-

Additional ratings available upon request.

Notes:

IRH-10

600 V CURRENT TRANSFORMER

UL Recognized Component

INDOOR-
OUTDOOR
60 Hertz

ARTECHE IRH series are dry type indoor/outdoor service current transformers. The core is encapsulated with epoxy resin which provides excellent internal dielectric properties and mechanical strength, ensuring a long mechanical and electrical life. The transformer is maintenance free.

The core is built with high permeability grain oriented silicon steel laminations for low losses. The windings are copper wire with copper plate double isolation. The concentric distribution of the coils prevents magnetic flux leakage, achieving greater accuracy and higher capacity to withstand mechanical stresses in adverse operating conditions.

Mechanical characteristics		
Insulation Material	Color	Weight (lbs.)
Resin	Blue	13

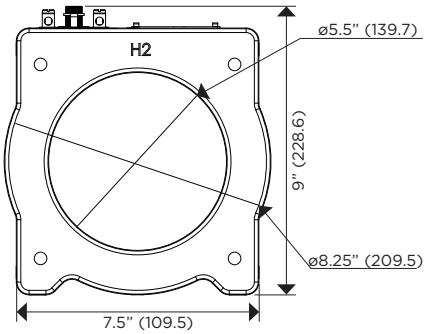

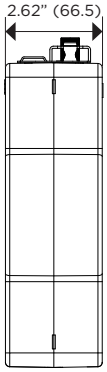

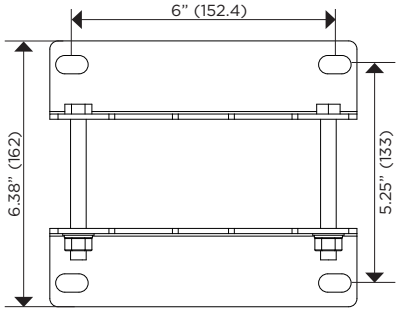

Drawing number: 4287273

	ONE SECONDARY	ONE SECONDARY with tap
MARKING (Single Primary Ratio)	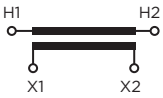	

	SECONDARY TERMINALS AND SHORT CIRCUIT DEVICE
CONNEC-TIONS	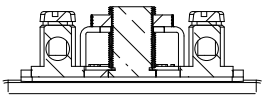 Secondary terminals. Type: Quick Connector Material: Brass Diameter: 1/4"

Approximate dimensions in inches (mm).

IRH-10

600 V CURRENT TRANSFORMER

Electrical characteristics										
Window type		Window plate type		Nema 4 Bar Type		Current Ratio (Primary: Secondary) (A)	Continuous Thermal Current Rating Factor @ 30°C	Continuous Thermal Current Rating Factor @ 55°C	IEEE Metering Accuracy	Relay Accuracy
No Base	Low Base	No Base	Low Base	No Base	Low Base					
735340000	735341080	735340060	735340040	735340120	735340100	400:5	3.0	2.2	0.3 B0.2	C-20
735340001	735341100	735340061	735340041	735340121	735340101	500:5	4.0	3.0	0.3 B0.5	-
735340002	735341120	735340062	735340042	735340122	735340102	600:5	3.0	2.2	0.3 B0.5	C-30
735340003	735341160	735340063	735340043	735340123	735340103	800:5	2.0	1.5	0.3 B0.5	C-30
735340004	735341200	735340064	735340044	735340124	735340104	1000:5	2.0	1.5	0.3 B0.5	C-30
735340005	735341240	735340065	735340045	735340125	735340105	1200:5	2.0	1.5	0.3 B0.9	C-30
735340006	735341300	735340066	735340046	735340126	735340106	1500:5	3.0	2.2	0.3 B0.9	C-30
735340007	735341400	735340067	735340047	735340127	735340107	2000:5	2.0	1.5	0.3 B1.8	C-50
735340008	735341600	735340068	735340048	735340128	735340108	3000:5	1.5	1.2	0.3 B1.8	C-10
735340009	735341800	735340069	735340049	735340129	735340109	4000:5	1.33	1.0	0.3 B1.8	-
735340160	735342120	735340220	735340200	735340280	735340260	600/1200:5	3.0/2.0	2.2/1.5	0.3 B0.2/B0.9	C-10/C-30
735340161	735342160	735340221	735340201	735340281	735340261	800/1600:5	3.0/2.0	2.2/1.5	0.3 B0.2/B1.8	C-30/C-50
735340162	735342200	735340222	735340202	735340282	735340262	1000/2000:5	3.0/2.0	2.2/1.5	0.3 B0.5/B1.8	C-30/C-50
735340163	735342300	735340223	735340203	735340283	735340263	1500/3000:5	2.0/1.5	1.5/1.2	0.3 B0.9/B1.8	-/C-10
735340164	735342400	735340224	735340204	735340284	735340264	2000/4000:5	2.0/1.33	1.5/1.0	0.3 B1.8/B1.8	-
High Accuracy Extended Range 5% nominal current to Rating Factor										
735340320	735347400	735340380	735340360	735340440	735340420	2000:5	2.5	1.8	0.15S B0.9	-

Additional ratings available upon request.

Notes:

IRH-12

600 V CURRENT TRANSFORMER

ARTECHE IRH series are dry type indoor/outdoor service current transformers. The core is encapsulated with epoxy resin which provides excellent internal dielectric properties and mechanical strength, ensuring a long mechanical and electrical life. The transformer is maintenance free.

The core is built with high permeability grain oriented silicon steel laminations for low losses. The windings are copper wire with copper plate double isolation. The concentric distribution of the coils prevents magnetic flux leakage, achieving greater accuracy and higher capacity to withstand mechanical stresses in adverse operating conditions.

UL Recognized Component

INDOOR-
OUTDOOR
60 Hertz

Mechanical characteristics		
Insulation Material	Color	Weight (lbs.)
Resin	Blue	19

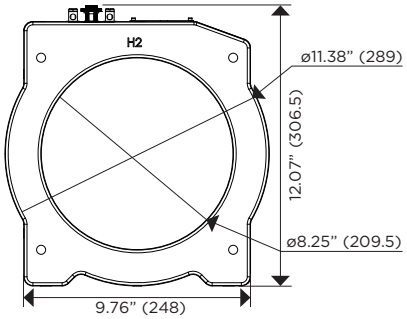

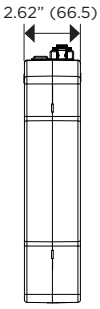

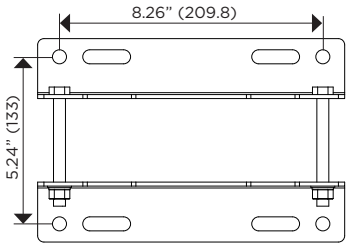

Drawing number: 4287275

	ONE SECONDARY	ONE SECONDARY with tap
MARKING (Single Primary Ratio)	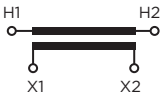	

	SECONDARY TERMINALS AND SHORT CIRCUIT DEVICE
CONNEC-TIONS	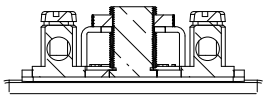 Secondary terminals. Type: Quick Connector Material: Brass Diameter: 1/4"

Approximate dimensions in inches (mm).

IRH-12

600 V CURRENT TRANSFORMER

Electrical characteristics

Window type		Current Ratio (Primary: Secondary) (A)	Continuous Thermal Current Rating Factor @ 30°C	Continuous Thermal Current Rating Factor @ 55°C	IEEE Metering Accuracy	Relay Accuracy
No Base	Low Base					
735360000	735361400	2000:5	2.0	1.5	0.3 B0.9	C-50
735360001	735361600	3000:5	2.0	1.5	0.3 B1.8	C-100
735360002	735361800	4000:5	1.5	1.2	0.3 B1.8	C-100
735360003	735361100	5000:5	1.33	1.0	0.3 B1.8	C-100
735360004	735361120	6000:5	1.0	0.75	0.3 B1.8	-
735360030	735362200	1000/2000:5	3.0/2.0	2.2/1.5	0.3 B0.5/B1.8	C-30/C-50
735360031	735362300	1500/3000:5	3.0/2.0	2.2/1.5	0.3 B0.5/B1.8	C-50/C-100
735360032	735362400	2000/4000:5	2.0/1.5	1.5/1.2	0.3 B0.9/B1.8	C-50/C-100
735360033	735369991	2500/5000:5	2.0/1.33	1.5/1.0	0.3 B1.8/B1.8	C-50/C-100
735360034	735369992	3000/6000:5	1.33/1.0	1.0/0.75	0.3 B1.8/B1.8	-
High Accuracy Extended Range 5% nominal current to Rating Factor						
735360060	735367400	2000:5	2.5	1.8	0.15S B0.9	-

Additional ratings available upon request.

Notes:

ICP-3

600 V CURRENT TRANSFORMER

INDOOR
60 Hertz

ARTECHE ICP series are dry type indoor service current transformers. The core is encapsulated with an impact-resistant polycarbonate which provides excellent internal dielectric properties and mechanical strength, ensuring a long mechanical and electrical life. The transformer is maintenance free.

The core is built with high permeability grain oriented silicon steel laminations for low losses.

The windings are copper wire with copper plate double isolation. The concentric distribution of the coils prevents magnetic flux leakage, achieving greater accuracy and higher capacity to withstand mechanical stresses in adverse operating conditions.

Mechanical characteristics		
Insulation Material	Color	Weight (lbs.)
Polycarbonate	Black	26

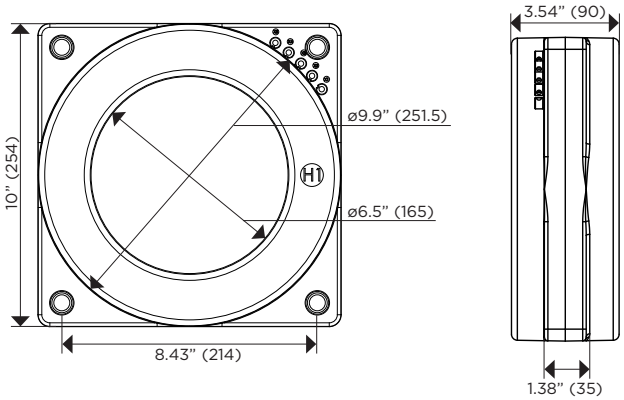

Drawing number: 4287899

	ONE SECONDARY	ONE SECONDARY MULTIRATIO
MARKING (Single Primary Ratio)		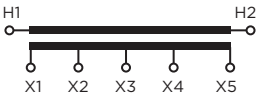

Approximate dimensions in inches (mm).

ICP-3

600 V CURRENT TRANSFORMER

Electrical characteristics

Code	Window Size	Current Ratio (Primary: Secondary) (A)	Continuous Thermal Current Rating Factor @ 30°C	Continuous Thermal Current Rating Factor @ 55°C	IEEE Metering Accuracy	Relay Accuracy	Nominal Voltage System (kV)	BIL (kV)	Power-Frequency Withstand Voltage (1 min)	
									Primary & Secondary (kV_{rms})	Secondary Winding (kV_{rms})
735131010	6.50″	50:5	2.0	1.5	4.8B0.1	---	0.6	10	4	2.5
735131015	6.50″	75:5	2.0	1.5	2.4B0.2	C10	0.6	10	4	2.5
735131020	6.50″	100:5	2.0	1.5	1.2B0.1/2.4B0.2	C10	0.6	10	4	2.5
735131030	6.50″	150:5	2.0	1.5	0.6B0.1/1.2B0.2/2.4B0.5	C20	0.6	10	4	2.5
735131040	6.50″	200:5	2.0	1.5	0.6B0.2/1.2B0.5/2.4B0.9	C20	0.6	10	4	2.5
735131050	6.50″	250:5	2.0	1.5	0.6B0.2/1.2B0.5/2.4B0.9	C20	0.6	10	4	2.5
735131060	6.50″	300:5	2.0	1.5	0.3B0.1/0.6B0.2/1.2B0.9/2.4B1.8	C20	0.6	10	4	2.5
735131080	6.50″	400:5	2.0	1.5	0.3B0.2/0.6B0.5/1.2B1.8	C50	0.6	10	4	2.5
735131100	6.50″	500:5	2.0	1.5	0.3B0.5/0.6B0.9/1.2B1.8	C50	0.6	10	4	2.5
735131120	6.50″	600:5	2.0	1.5	0.3B0.5/0.6B1.8	C100	0.6	10	4	2.5
735131140	6.50″	750:5	2.0	1.5	0.3B0.9/0.6B1.8	C100	0.6	10	4	2.5
735131160	6.50″	800:5	2.0	1.5	0.3B0.9/0.6B1.8	C100	0.6	10	4	2.5
735131200	6.50″	1000:5	2.0	1.5	0.3B1.8	C100	0.6	10	4	2.5
735131240	6.50″	1200:5	2.0	1.5	0.3B1.8	C200	0.6	10	4	2.5
735131300	6.50″	1500:5	2.0	1.5	0.3B1.8	C200	0.6	10	4	2.5
735131320	6.50″	1600:5	2.0	1.5	0.3B1.8	C200	0.6	10	4	2.5
735131400	6.50″	2000:5	2.0	1.5	0.3B1.8	C200	0.6	10	4	2.5
735131500	6.50″	2500:5	2.0	1.5	0.3B1.8	C200	0.6	10	4	2.5
735131600	6.50″	3000:5	2.0	1.5	0.3B1.8	C200	0.6	10	4	2.5
735131640	6.50″	3200:5	2.0	1.5	0.3B1.8	C200	0.6	10	4	2.5
735131700	6.50″	3500:5	2.0	1.5	0.3B1.8	C200	0.6	10	4	2.5
735131800	6.50″	4000:5	2.0	1.5	0.3B1.8	C200	0.6	10	4	2.5
735139991	6.50″	5000:5	1.0	0.8	0.3B1.8	C200	0.6	10	4	2.5
735139992	6.50″	6000:5	0.8	0.6	0.3B1.8	C200	0.6	10	4	2.5
735132120	6.50″	600:5 MR	2.0	1.5	0.3B0.5/0.6B1.8	C100	0.6	10	4	2.5
735132240	6.50″	1200:5 MR	2.0	1.5	0.3B1.8	C200	0.6	10	4	2.5
735132400	6.50″	2000:5 MR	2.0	1.5	0.3B1.8	C200	0.6	10	4	2.5
735132600	6.50″	3000:5 MR	2.0	1.5	0.3B1.8	C200	0.6	10	4	2.5
735132800	6.50″	4000:5 MR	2.0	1.5	0.3B1.8	C200	0.6	10	4	2.5

Additional ratings available upon request.

Notes:

.....

.....

.....

.....

.....

.....

.....

.....

ICP-5

600 V CURRENT TRANSFORMER

INDOOR
60 Hertz

ARTECHE ICP series are dry type indoor service current transformers. The core is encapsulated with an impact-resistant polycarbonate which provides excellent internal dielectric properties and mechanical strength, ensuring a long mechanical and electrical life. The transformer is maintenance free.

The core is built with high permeability grain oriented silicon steel laminations for low losses.

The windings are copper wire with copper plate double isolation. The concentric distribution of the coils prevents magnetic flux leakage, achieving greater accuracy and higher capacity to withstand mechanical stresses in adverse operating conditions.

Mechanical characteristics		
Insulation Material	Color	Weight (lbs.)
Polycarbonate	Black	54.8

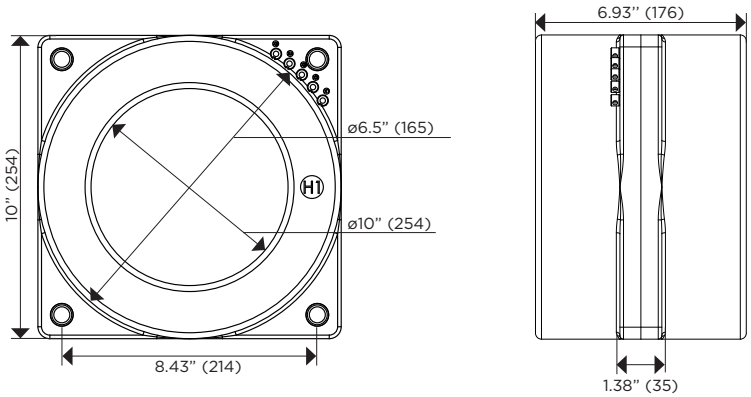

Drawing number: 4287900

	ONE SECONDARY	ONE SECONDARY MULTIRATIO
MARKING (Single Primary Ratio)	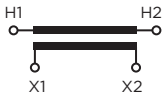	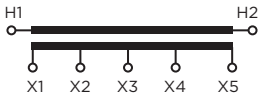

Approximate dimensions in inches (mm).

ICP-5

600 V CURRENT TRANSFORMER

Electrical characteristics

Code	Window Size	Current Ratio (Primary: Secondary) (A)	Continuous Thermal Current Rating Factor @ 30°C	Continuous Thermal Current Rating Factor @ 55°C	IEEE Metering Accuracy	Relay Accuracy	Nominal Voltage System (kV)	BIL (kV)	Power-Frequency Withstand Voltage (1 min)	
									Primary & Secondary (kV_{rms})	Secondary Winding (kV_{rms})
735151010	6.50″	50:5	2.0	1.5	2.4B0.1/4.8B0.2	C10	0.6	10	4	2.5
735151015	6.50″	75:5	2.0	1.5	1.2B0.2/2.4B0.5	C20	0.6	10	4	2.5
735151020	6.50″	100:5	2.0	1.5	0.6B0.1/1.2B0.2/2.4B0.5	C20	0.6	10	4	2.5
735151030	6.50″	150:5	2.0	1.5	0.6B0.2/1.2B0.5/2.4B0.9	C50	0.6	10	4	2.5
735151040	6.50″	200:5	2.0	1.5	0.3B0.2/0.6B0.5/1.2B0.9/2.4B1.8	C50	0.6	10	4	2.5
735151050	6.50″	250:5	2.0	1.5	0.3B0.2/0.6B0.5/1.2B0.9/2.4B1.8	C50	0.6	10	4	2.5
735151060	6.50″	300:5	2.0	1.5	0.3B0.5/0.6B0.9/1.2B1.8	C100	0.6	10	4	2.5
735151080	6.50″	400:5	2.0	1.5	0.3B0.5/0.6B1.8	C100	0.6	10	4	2.5
735151100	6.50″	500:5	2.0	1.5	0.3B0.9/0.6B1.8	C100	0.6	10	4	2.5
735151120	6.50″	600:5	2.0	1.5	0.3B0.9/0.6B1.8	C200	0.6	10	4	2.5
735151150	6.50″	750:5	2.0	1.5	0.3B1.8	C200	0.6	10	4	2.5
735151160	6.50″	800:5	2.0	1.5	0.3B1.8	C200	0.6	10	4	2.5
735151200	6.50″	1000:5	2.0	1.5	0.3B1.8	C200	0.6	10	4	2.5
735151240	6.50″	1200:5	2.0	1.5	0.3B1.8	C400	0.6	10	4	2.5
735151300	6.50″	1500:5	2.0	1.5	0.3B1.8	C400	0.6	10	4	2.5
735151320	6.50″	1600:5	2.0	1.5	0.3B1.8	C400	0.6	10	4	2.5
735151400	6.50″	2000:5	2.0	1.5	0.3B1.8	C400	0.6	10	4	2.5
735151500	6.50″	2500:5	2.0	1.5	0.3B1.8	C400	0.6	10	4	2.5
735151600	6.50″	3000:5	2.0	1.5	0.3B1.8	C400	0.6	10	4	2.5
735151800	6.50″	4000:5	1.33	1.0	0.3B1.8	C400	0.6	10	4	2.5
735159991	6.50″	5000:5	1.0	0.75	0.3B1.8	C400	0.6	10	4	2.5
735159992	6.50″	6000:5	1.0	0.75	0.3B1.8	C400	0.6	10	4	2.5
735152120	6.50″	600:5 MR	2	1.5	0.3B0.9/0.6B1.8	C200	0.6	10	4	2.5
735152240	6.50″	1200:5 MR	2	1.5	0.3B1.8	C400	0.6	10	4	2.5
735152400	6.50″	2000:5 MR	2	1.5	0.3B1.8	C400	0.6	10	4	2.5
735152600	6.50″	3000:5 MR	2	1.5	0.3B1.8	C400	0.6	10	4	2.5
735152800	6.50″	4000:5 MR	1.33	1.0	0.3B1.8	C400	0.6	10	4	2.5
735159993	6.50″	5000:5 MR	1	0.75	0.3B1.8	C400	0.6	10	4	2.5
735159994	6.50″	6000:5 MR	1	0.75	0.3B1.8	C400	0.6	10	4	2.5

Additional ratings available upon request.

Notes:

OVER BUSHING CURRENT TRANSFORMER

600 V CURRENT TRANSFORMER

OUTDOOR
60 Hertz
Single, Dual and
Multi Ratios,
Window Type,
Metering/Relaying

The ARTECHE Over Bushing CT series are 600 V rated units designed to fit over a variety of specified bushing sizes. Primary current ratios are available from 200:5 thru 5000:5 at 60 Hz with a Rating Factor of up to 4.0.

This Slip-Over type CT will operate with high accuracy for metering or relay applications.

Mechanical characteristics

The core and coil assembly is wound and tape wrapped and is available in window sizes from 2.5 to 45 inches. The secondary leads are typically #10 AWG or #12 AWG. The bushing insulation provides the dielectric protection for the CT.

A metal housing covers the whole Current Transformer.

The core of the CT is constructed from high permeability grain oriented silicon steel laminations which provide low core losses. The windings are constructed with copper wire and copper plate double isolation. Concentric distribution of the CT coils prevents magnetic flux leakage, achieving greater accuracy and higher capacity to withstand mechanical stresses under adverse operating conditions.

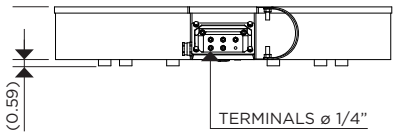

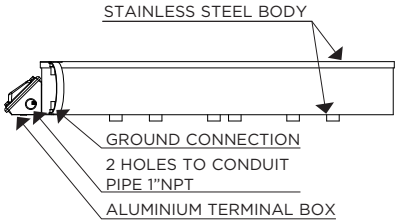

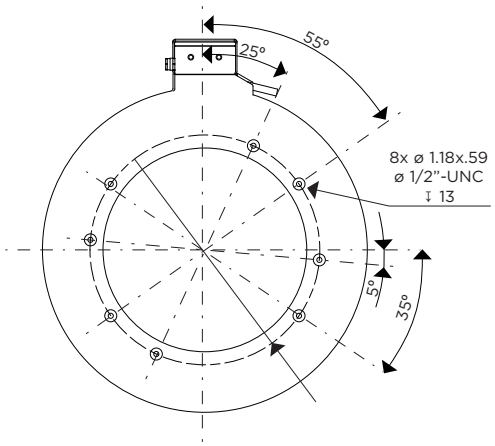

OVER BUSHING CURRENT TRANSFORMER

600 V CURRENT TRANSFORMER

Accuracy perfomance

The ARTECHE Bushing CT provides 0.3 metering class accuracy with burdens from B0.1 to B1.8 and up to class C800 for relay applications. The transformer is accurate through its Rating Factor, and can be used continuously to this level.

Testing

The ARTECHE Bushing CT is individually tested per the IEEE C57.13 standard, including dielectric tests, accuracy and polarity.

Mounting

The ARTECHE Bushing CT is designed to be externally mounted around the bushings of power transformers, circuit breakers, underground potheads or in switchgear.

Options

Through careful calculation, steel selection and testing, existing current transformer characteristics can be matched with the ARTECHE Bushing CT. Existing characteristic curve would be required. Contact factory for other needs.

How to order

When ordering an ARTECHE Over Bushing CT, include the following information:

1. Minimum inside diameter (ID)	___ in [mm]
2. Maximum outside diameter (OD)	___ in [mm]
3. Maximum allowable height (HT)	___ in [mm]
4. Current ratio and taps, if any	___ (:5A or :1A | SR, DR, MR)
5. Accuracy and burden requirements, for example,	
Metering -	___ (0.3 B0.1 thru B1.8)
Relaying -	___ (C-100, C-200, C-400, or C-800 or other)
If IEC ratings, list class and burden	___ (e.g., class 0.2-20 VA, 5P20-40 VA)
6. Continuous Rating Factor	___ (standard is RF=2.0)
7. Frequency	___ (standard is 60 Hz)
8. Lead length & type	___, size - ___(standard is #10 AWG TW)

NOTE – Due to the many variations of mounting, Arteche does not supply mounting hardware.
Units are custom manufactured to customer specifications. Contact factory to discuss other options.

Notes:

.....

.....

.....

.....

.....

.....

.....

.....

.....

.....

.....

BUSHING CURRENT TRANSFORMER

600 V CURRENT TRANSFORMER

INDOOR
60 Hertz
Single, Dual and Multi Ratios,
Window Type,
Metering/Relaying

ARTECHE Bushing CT series are designed to fit over a variety of specified bushing sizes. Primary current ratios are available from 200:5 thru 5000:5 at 60 Hz with a Rating Factor up to 4.0. This tape-wound CT will operate for metering or relaying applications.

Mechanical characteristics

The core and coil assembly is wound and tape wrapped and is available in window sizes from 2.5 to 45 inches.

The secondary leads are typically #10 AWG or #12 AWG. The bushing insulation provides the dielectric protection for the CT. Optional TEFZEL insulation for the CT is also available.

The core of the CT is constructed from high permeability grain oriented silicon steel laminations which provide low core losses. The windings are constructed with copper wire and copper plate double insulated. All secondary windings are fully distributed around the core, which provides low leakage reactance on each ratio, achieving greater accuracy and higher capacity to withstand mechanical stresses under adverse operating conditions.

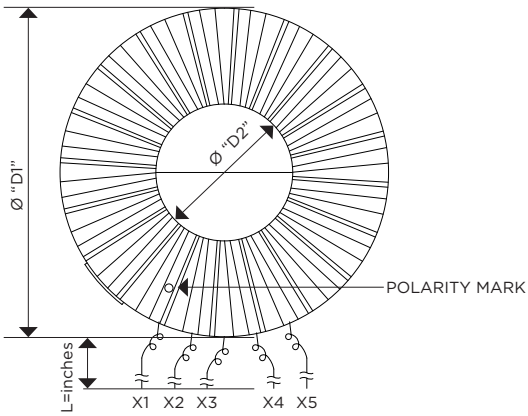

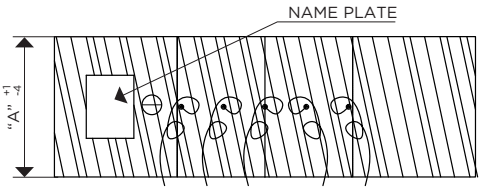

Ø "D1"	Ø "D2"	"A"	"L"=inches	WEIGHT lbs.

Specs and dimensions available upon request.

Drawing number: 4285816

TYPE OF CONNECTIONS (Secondary terminal)

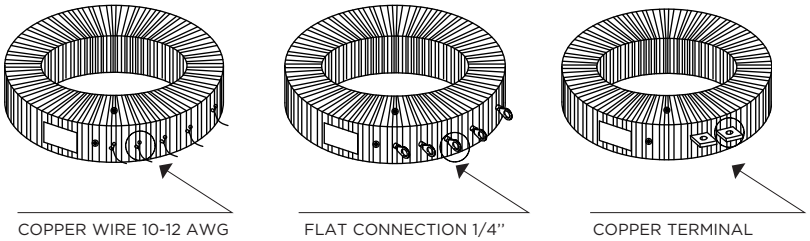

BUSHING CURRENT TRANSFORMER

600 V CURRENT TRANSFORMER

Accuracy perfomance

The ARTECHE Bushing CT provides 0.3 metering class accuracy with burdens from B0.1 to B1.8 and class C-800 for relaying applications. The transformer is accurate through its Rating Factor for continuous operation.

Testing

The Arteche Bushing CT is individually tested and certified to IEEE C57.13 or CAN/CSA C60044.

Mounting

The ARTECHE Bushing CT is designed to be internally mounted around the bushings of power transformers, circuit breakers and switchgear.

Features and quality

- Customized solutions can be developped to satisfy specifical customer needs.
- Consistent accuracy during the transformer's entire life cycle, providing maximum reliability.
- ISO 9001:2008 quality system certificate.

How to order

When ordering an ARTECHE Bushing CT, include the following information:

1. Minimum inside diameter (D2)	___ in
2. Maximum outside diameter (D1)	___ in
3. Maximum allowable height (A)	___ in
4. Current ratio and taps, if any	___ (:5A or :1A | Single Ratio, Double Ratio or Multi Ratio)
5. Accuracy and burden requirements, for example,	
Metering -	___ (0.3 B0.1 thru B1.8 or other)
Relaying -	___ (C-100, C-200, C-400, or C-800 or other)
6. Continuous Rating Factor	___ (standard is RF=2.0)
7. Frequency	___ (standard is 60 Hz)
8. Lead length & type	___, size - ___(standard is #10 AWG)
9. Used in or above oil	___ (Yes/No), or in dry surroundings - ___ (Yes/No)

NOTE – Due to the many variations of mounting, Arteche does not supply mounting hardware.
Please, don't hesitate to contact us to discuss other options.

Notes:

.....

.....

.....

.....

.....

.....

.....

.....

.....

.....

.....

URC-3

600 V VOLTAGE TRANSFORMER

INDOOR/OUTDOOR
60 Hertz

UL Recognized Component

ARTECHE URC series are dry type indoor/outdoor service voltage transformers. The core is encapsulated with polyurethane which provides excellent internal dielectric properties and mechanical strength, ensuring a long mechanical and electrical life. The transformer is maintenance free.

The core is built with high permeability grain oriented silicon steel laminations for low losses. The windings are copper wire with copper plate double isolation. The concentric distribution of the coils prevents magnetic flux leakage, achieving greater accuracy and higher capacity to withstand mechanical stresses in adverse operating conditions.

Mechanical characteristics		
Insulation Material	Colors	Weight (lbs.)
Polyurethane	Black	12.6

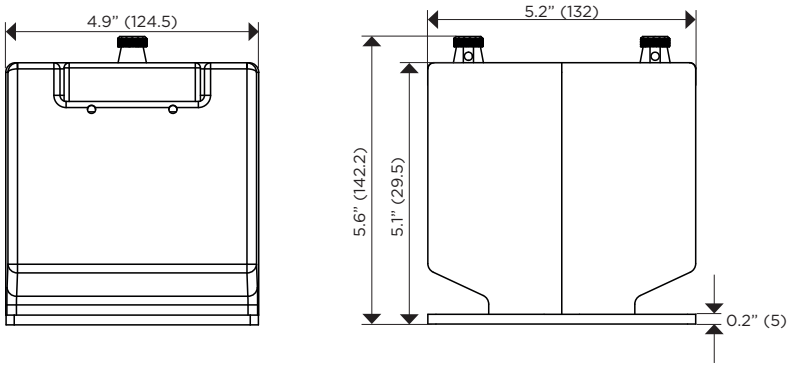

Drawing number: 4287754

	ONE SECONDARY
MARKING (Single Primary Ratio)	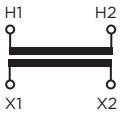

Approximate dimensions in inches (mm).

URC-3

600 V VOLTAGE TRANSFORMER

Electrical characteristics

Code	Ratio	Primary (V)	Secondary (V)	IEEE Metering Accuracy	Continuous Rated Voltage Factor (Un)	Rated Voltage Factor 30 s (Un)	Thermal Burden (VA)	Nominal Voltage System (kV)	BIL (kV)	Power-Frequency Withstand Voltage (1 min)	
										Primary & Secondary (kV_{rms})	Secondary Winding (kV_{rms})
755500106	1.061:1	115/200Y	108.3	0.3 W, 0.6 X	-	-	300 VA	0.6	10	4	2.5
755500001	1:1	120/208Y	120	0.6 W	-	-	300 VA	0.6	10	4	2.5
755500002	2:1	240/416Y	120	0.3 W, 0.6 X	-	-	300 VA	0.6	10	4	2.5
755500023	2.3:1	276/478Y	120	0.3 W, 0.6 X	-	-	300 VA	0.6	10	4	2.5
755500024	2.4:1	288/500Y	120	0.3 W, 0.6 X	-	-	300 VA	0.6	10	4	2.5
755500025	2.5:1	300/520Y	120	0.3 W, 0.6 X	-	-	300 VA	0.6	10	4	2.5
755500003	3:1	360/480Y	120	0.3 W, 0.6 X	-	-	300 VA	0.6	10	4	2.5
755500333	3.33:1	400/400Y	120	0.3 W, 0.6 X	-	-	300 VA	0.6	10	4	2.5
755500004	4:1	480/480Y	120	0.3 W, 0.6 X	-	-	300 VA	0.6	10	4	2.5
755500020	2:1	480/480Y	240	0.3@12.5VA	-	-	300 VA	0.6	10	4	2.5
755500416	4.167:1	500/500Y	120	0.3 W, 0.6 X	-	-	300 VA	0.6	10	4	2.5
755500005	5:1	600/600Y	120	0.3 W, 0.6 X	-	-	300 VA	0.6	10	4	2.5
755500250	2.5:1	600/600Y	240	0.3 W, 0.6 X	-	-	300 VA	0.6	10	4	2.5

Notes:

URC-5

600 V VOLTAGE TRANSFORMER

INDOOR/OUTDOOR
60 Hertz

UL Recognized Component

ARTECHE URC series are dry type indoor/outdoor service voltage transformers. The core is encapsulated with polyurethane which provides excellent internal dielectric properties and mechanical strength, ensuring a long mechanical and electrical life. The transformer is maintenance free.

The core is built with high permeability grain oriented silicon steel laminations for low losses. The windings are copper wire with copper plate double isolation. The concentric distribution of the coils prevents magnetic flux leakage, achieving greater accuracy and higher capacity to withstand mechanical stresses in adverse operating conditions.

Mechanical characteristics		
Insulation Material	Colors	Weight (lbs.)
Polyurethane	Black	15.6

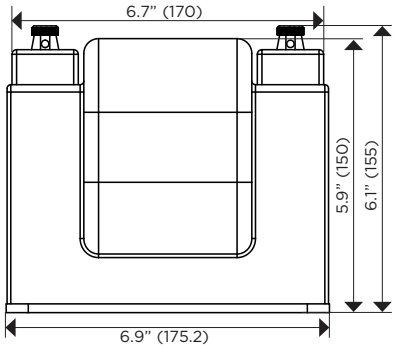

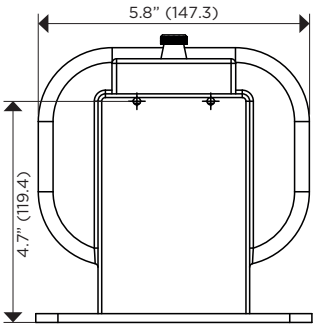

Drawing number: 4287986

	ONE SECONDARY
MARKING (Single Primary Ratio)	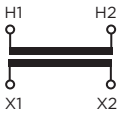

Approximate dimensions in inches (mm).

URC-5

600 V VOLTAGE TRANSFORMER

Electrical characteristics

Code	Ratio	Primary (V)	Secondary (V)	IEEE Metering Accuracy	Continuous Rated Voltage Factor (Un)	Rated Voltage Factor 30 s (Un)	Thermal Burden (VA)	Nominal Voltage System (kV)	BIL (kV)	Power-Frequency Withstand Voltage (1 min)	
										Primary & Secondary (kV_{rms})	Secondary Winding (kV_{rms})
755510002	2:1	240/416Y	120	0.3 Y	-	-	500 VA	0.6	10	4	2.5
755510024	2.4:1	288/500Y	120	0.3 Y	-	-	500 VA	0.6	10	4	2.5
755510025	2.5:1	300/520Y	120	0.3 Y	-	-	500 VA	0.6	10	4	2.5
755510003	3:1	360/480Y	120	0.3 Y	-	-	500 VA	0.6	10	4	2.5
755510004	4:1	480/480Y	120	0.3 Y	-	-	500 VA	0.6	10	4	2.5
755510005	5:1	600/600Y	120	0.3 Y	-	-	500 VA	0.6	10	4	2.5
755510001	1:1	120/208Y	120	0.3 Y	-	-	500 VA	0.6	10	4	2.5

Notes:

arteche

5 kV – 34.5 kV INDOOR INSTRUMENT TRANSFORMERS

UCE-7

5 kV VOLTAGE TRANSFORMER

Unfused

Fused

INDOOR
60 Hertz

UL Recognized Component

ARTECHE UC/UX/VC series are dry type indoor service voltage transformers. The core is encapsulated with Type B epoxy resin which provides excellent internal dielectric properties and mechanical strength, ensuring a long mechanical and electrical life. The transformer is maintenance free.

The core is built with high permeability grain oriented silicon steel laminations for low losses. The windings are copper wire with copper plate double isolation. The concentric distribution of the coils prevents magnetic flux leakage, achieving greater accuracy and higher capacity to withstand mechanical stresses in adverse operating conditions.

Partial Discharge measurements exceed the IEEE, CAN/CSA and IEC requirements.

Mechanical characteristics

Insulation Material	Colors	Weight (lbs.)
Resin	Gray*	32

Unfused

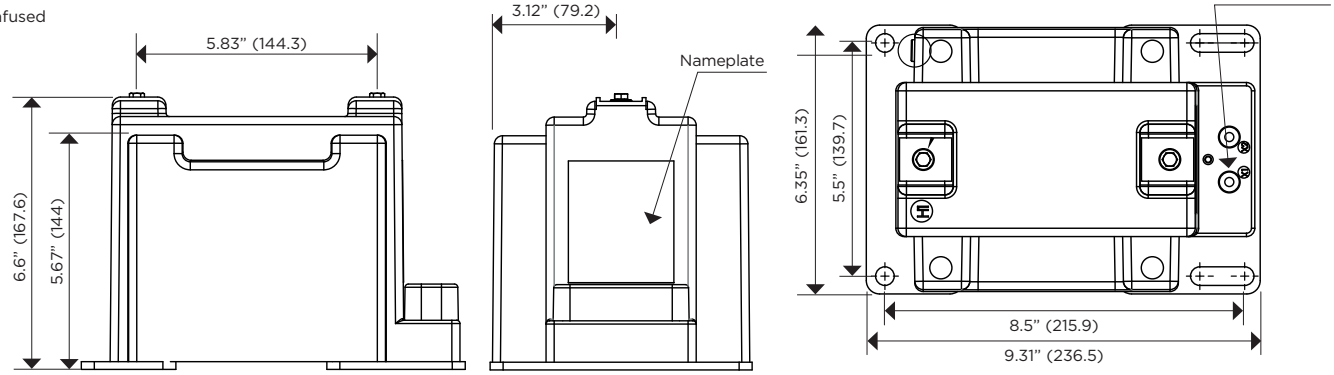

Drawing number: 4287874

Fused

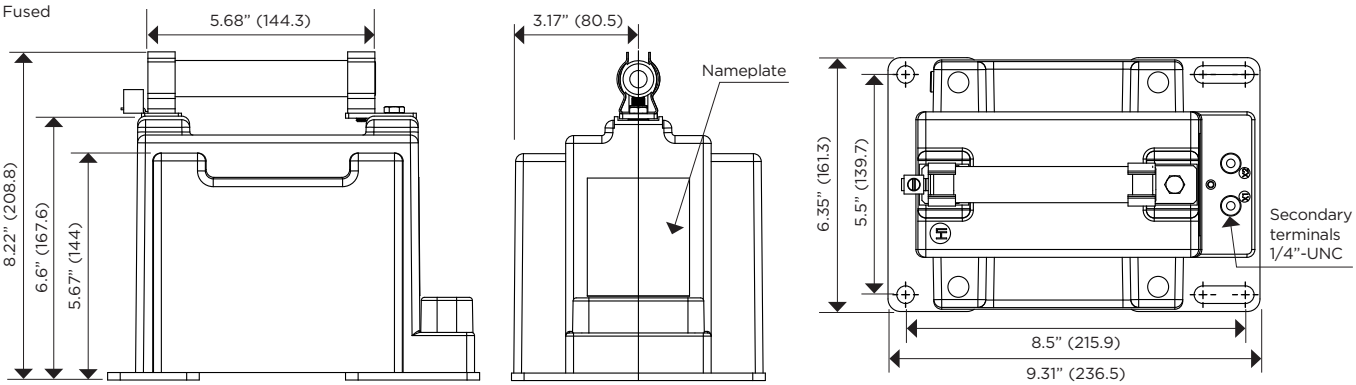

Drawing number: 4286786

	ONE SECONDARY
MARKING (Single Primary Ratio)	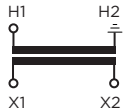

Approximate dimensions in inches (mm).
* Brown color available upon request

UCE-7

5 kV VOLTAGE TRANSFORMER

Electrical characteristics											
Code	Ratio	Primary (V)	Secondary (V)	IEEE Metering Accuracy	Continuous Rated Voltage Factor (Un)	Rated Voltage Factor 30 s (Un)	Thermal Burden (VA)	Nominal Voltage System (kV)	BIL (kV)	Power-Frequency Withstand Voltage (1 min)	
										Primary & Secondary (kV_{rms})	Secondary Winding (kV_{rms})
Switchgear style (no fuse)											
753060020	20:1	2400/4160GY	120	0.3 W,X,M,Y/1.2Z	1.1	1.25	750	5	60	19	2.5
753060035	35:1	4200/4200GY	120	0.3 W,X,M,Y/1.2Z	1.1	1.25	750	5	60	19	2.5
753060040	40:1	4800/4800GY	120	0.3 W,X,M,Y/1.2Z	1.1	1.25	750	5	60	19	2.5
Fuse clips only (no fuse)											
753061020	20:1	2400/4160GY	120	0.3 W,X,M,Y/1.2Z	1.1	1.25	750	5	60	19	2.5
753061035	35:1	4200/4200GY	120	0.3 W,X,M,Y/1.2Z	1.1	1.25	750	5	60	19	2.5
753061040	40:1	4800/4800GY	120	0.3 W,X,M,Y/1.2Z	1.1	1.25	750	5	60	19	2.5
Fuse clips and fuse											
753062020	20:1	2400/4160GY	120	0.3 W,X,M,Y/1.2Z	1.1	1.25	750	5	60	19	2.5
753062035	35:1	4200/4200GY	120	0.3 W,X,M,Y/1.2Z	1.1	1.25	750	5	60	19	2.5
753062040	40:1	4800/4800GY	120	0.3 W,X,M,Y/1.2Z	1.1	1.25	750	5	60	19	2.5

All units can be supplied either switchgear style, fuse clips only or fuses and clips. Please contact your commercial representant for further information.
Additional ratings available upon request.

Notes:

VCE-7

5 kV VOLTAGE TRANSFORMER

Unfused

Fused

INDOOR
60 Hertz

UL Recognized Component

ARTECHE UC/UX/VC series are dry type indoor service voltage transformers. The core is encapsulated with Type B epoxy resin which provides excellent internal dielectric properties and mechanical strength, ensuring a long mechanical and electrical life. The transformer is maintenance free.

The core is built with high permeability grain oriented silicon steel laminations for low losses. The windings are copper wire with copper plate double isolation. The concentric distribution of the coils prevents magnetic flux leakage, achieving greater accuracy and higher capacity to withstand mechanical stresses in adverse operating conditions.

Partial Discharge measurements exceed the IEEE, CAN/CSA and IEC requirements.

Mechanical characteristics		
Insulation Material	Colors	Weight (lbs.)
Resin	Gray*	32

Unfused

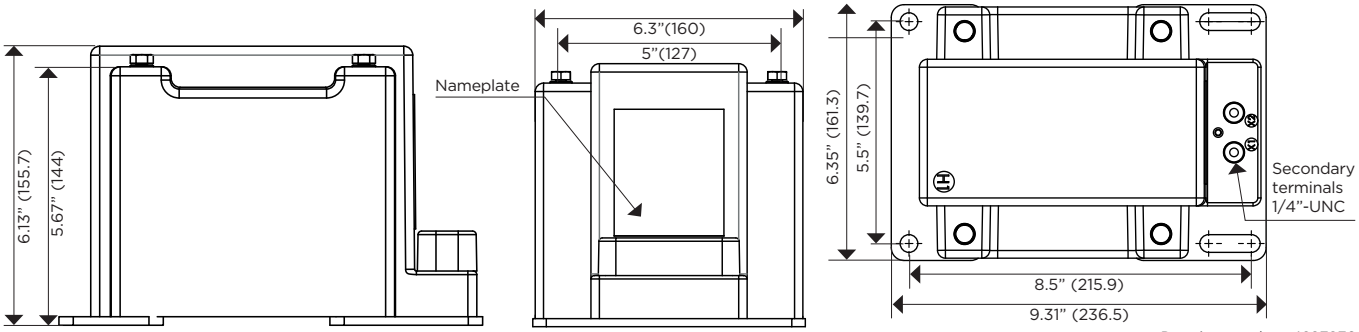

Drawing number: 4287876

Fused

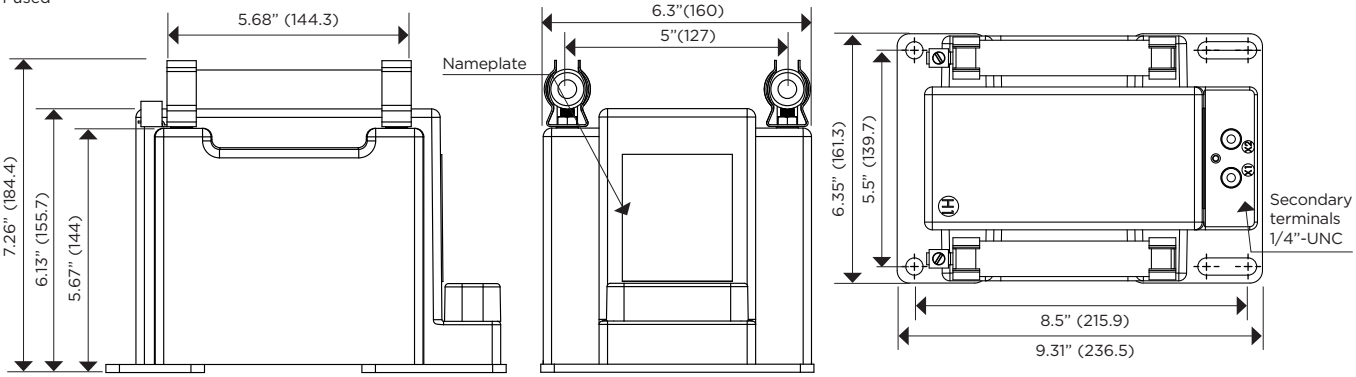

Drawing number: 4286786

	ONE SECONDARY
MARKING (Single Primary Ratio)	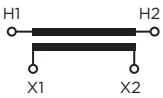

Approximate dimensions in inches (mm).
* Brown color available upon request

VCE-7

5 kV VOLTAGE TRANSFORMER

Electrical characteristics											
Code	Ratio	Primary (V)	Secondary (V)	IEEE Metering Accuracy	Continuous Rated Voltage Factor (Un)	Rated Voltage Factor 30 s (Un)	Thermal Burden (VA)	Nominal Voltage System (kV)	BIL (kV)	Power-Frequency Withstand Voltage (1 min)	
										Primary & Secondary (kV_{rms})	Secondary Winding (kV_{rms})
Switchgear style (no fuse)											
753030020	20:1	2400/4160Y	120	0.3 W,X,M,Y/1.2Z	1.1	1.25	750	5	60	19	2.5
753030035	35:1	4200/4200Y	120	0.3 W,X,M,Y/1.2Z	1.1	1.25	750	5	60	19	2.5
753030040	40:1	4800/4800Y	120	0.3 W,X,M,Y/1.2Z	1.1	1.25	750	5	60	19	2.5
Fuse clips only (no fuse)											
753031020	20:1	2400/4160Y	120	0.3 W,X,M,Y/1.2Z	1.1	1.25	750	5	60	19	2.5
753031035	35:1	4200/4200Y	120	0.3 W,X,M,Y/1.2Z	1.1	1.25	750	5	60	19	2.5
753031040	40:1	4800/4800Y	120	0.3 W,X,M,Y/1.2Z	1.1	1.25	750	5	60	19	2.5
Fuse clips and fuse											
753032020	20:1	2400/4160Y	120	0.3 W,X,M,Y/1.2Z	1.1	1.25	750	5	60	19	2.5
753032035	35:1	4200/4200Y	120	0.3 W,X,M,Y/1.2Z	1.1	1.25	750	5	60	19	2.5
753032040	40:1	4800/4800Y	120	0.3 W,X,M,Y/1.2Z	1.1	1.25	750	5	60	19	2.5

All units can be supplied either switchgear style, fuse clips only or fuses and clips. Please contact your commercial representant for further information.
Additional ratings available upon request.

Notes:

UXI-12

8.7 kV VOLTAGE TRANSFORMER

INDOOR
60 Hertz

UL Recognized Component

ARTECHE UC/UX/VC series are dry type indoor service voltage transformers. The core is encapsulated with Type B epoxy resin which provides excellent internal dielectric properties and mechanical strength, ensuring a long mechanical and electrical life. The transformer is maintenance free.

The core is built with high permeability grain oriented silicon steel laminations for low losses. The windings are copper wire with copper plate double isolation. The concentric distribution of the coils prevents magnetic flux leakage, achieving greater accuracy and higher capacity to withstand mechanical stresses in adverse operating conditions.

Partial Discharge measurements exceed the IEEE, CAN/CSA and IEC requirements.

Mechanical characteristics		
Insulation Material	Colors	Weight (lbs.)
Resin	Gray*	60

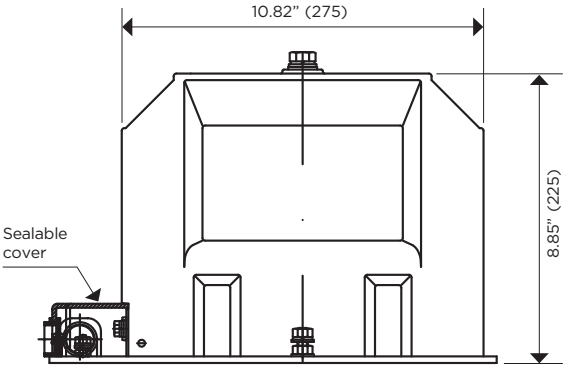

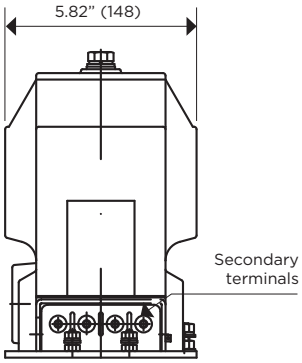

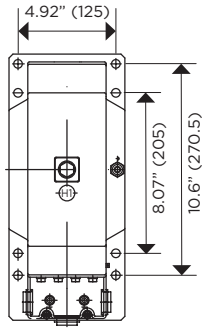

Drawing number: 4286155

	ONE SECONDARY
MARKING (Single Primary Ratio)	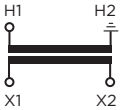

Approximate dimensions in inches (mm).
* Brown color available upon request

UXI-12

8.7 kV VOLTAGE TRANSFORMER

Electrical characteristics

Code	Ratio	Primary (V)	Secondary (V)	IEEE Metering Accuracy	Continuous Rated Voltage Factor (Un)	Rated Voltage Factor 30 s (Un)	Thermal Burden (VA)	Nominal Voltage System (kV)	BIL (kV)	Power-Frequency Withstand Voltage (1 min)	
										Primary & Secondary (kV_{rms})	Secondary Winding (kV_{rms})
753221020	20:1	2400/4160GY	120	0.6 W,X,M,Y	1.1	1.5	450	8.7	75	26	2.5
753221035	35:1	4200/7200GY	120	0.6 W,X	1.1	1.5	450	8.7	75	26	2.5
753221040	40:1	4800/8320GY	120	0.6 W,X	1.1	1.5	450	8.7	75	26	2.5
753221060	60:1	7200/12470GY	120	0.6 W,X	1.1	1.5	450	8.7	75	26	2.5

Additional ratings available upon request.

Notes:

UCE-17

15 kV VOLTAGE TRANSFORMER

INDOOR
60 Hertz

UL Recognized Component

ARTECHE UC/UX/VC series are dry type indoor service voltage transformers. The core is encapsulated with Type B epoxy resin which provides excellent internal dielectric properties and mechanical strength, ensuring a long mechanical and electrical life. The transformer is maintenance free.

The core is built with high permeability grain oriented silicon steel laminations for low losses. The windings are copper wire with copper plate double isolation. The concentric distribution of the coils prevents magnetic flux leakage, achieving greater accuracy and higher capacity to withstand mechanical stresses in adverse operating conditions.

Partial Discharge measurements exceed the IEEE, CAN/CSA and IEC requirements.

Mechanical characteristics

Insulation Material	Colors	Weight (lbs.)
Resin	Gray*	85

Unfused

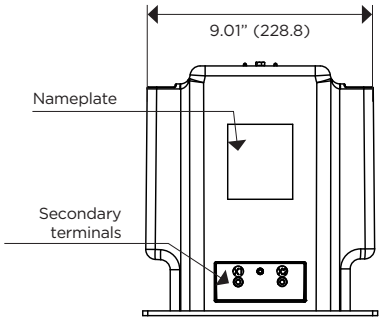

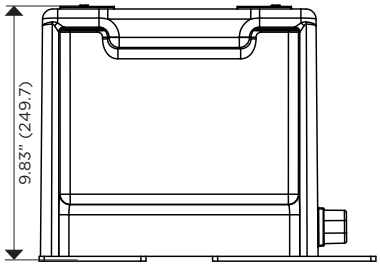

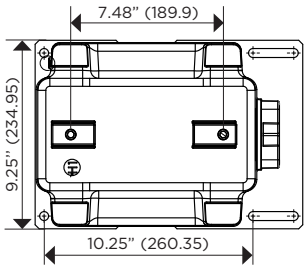

Drawing number: 4287875

Fused

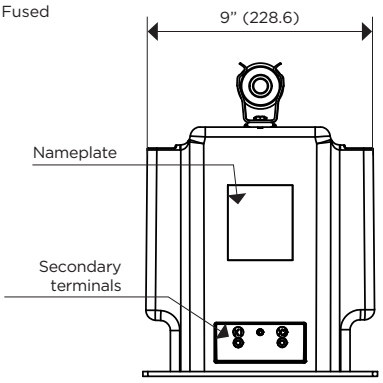

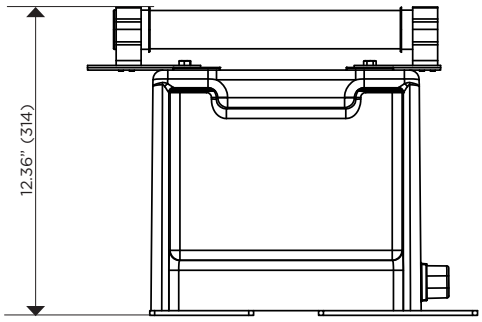

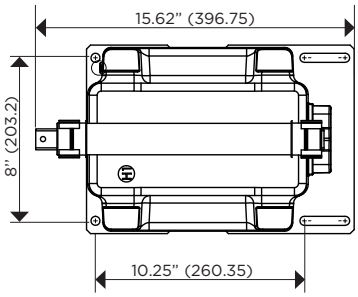

Drawing number: 4286373

MARKING (Single Primary Ratio)	ONE SECONDARY
	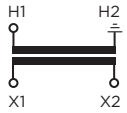

Approximate dimensions in inches (mm).
* Brown color available upon request

UCE-17

15 kV VOLTAGE TRANSFORMER

Electrical characteristics											
Code	Ratio	Primary (V)	Secon-dary (V)	IEEE Metering Accuracy	Continuous Rated Voltage Factor (Un)	Rated Voltage Factor 30 s (Un)	Thermal Burden (VA)	Nominal Voltage System (kV)	BIL (kV)	Power-Frequency Withstand Voltage (1 min)	
										Primary & Secondary (kV_{rms})	Secondary Winding (kV_{rms})
Switchgear style (no fuse)											
753460060	60:1	7200/12470GY	120	0.3 W,X,M,Y,Z/1.2ZZ	1.1	1.25	1500	15	110	34	2.5
753460070	70:1	8400/14460GY	120	0.3 W,X,M,Y,Z/1.2ZZ	1.1	1.25	1500	15	110	34	2.5
753460100	100:1	12000/12000GY	120	0.3 W,X,M,Y,Z/1.2ZZ	1.1	1.25	1500	15	110	34	2.5
753460110	110:1	13200/13200GY	120	0.3 W,X,M,Y,Z/1.2ZZ	1.1	1.25	1500	15	110	34	2.5
753460120	120:1	14400/14400GY	120	0.3 W,X,M,Y,Z/1.2ZZ	1.1	1.25	1500	15	110	34	2.5
Fuse clips only (no fuse)											
753461060	60:1	7200/12470GY	120	0.3 W,X,M,Y,Z/1.2ZZ	1.1	1.25	1500	15	110	34	2.5
753461070	70:1	8400/14460GY	120	0.3 W,X,M,Y,Z/1.2ZZ	1.1	1.25	1500	15	110	34	2.5
753461100	100:1	12000/12000GY	120	0.3 W,X,M,Y,Z/1.2ZZ	1.1	1.25	1500	15	110	34	2.5
753461110	110:1	13200/13200GY	120	0.3 W,X,M,Y,Z/1.2ZZ	1.1	1.25	1500	15	110	34	2.5
753461120	120:1	14400/14400GY	120	0.3 W,X,M,Y,Z/1.2ZZ	1.1	1.25	1500	15	110	34	2.5
Fuse clips and fuse											
753462060	60:1	7200/12470GY	120	0.3 W,X,M,Y,Z/1.2ZZ	1.1	1.25	1500	15	110	34	2.5
753462070	70:1	8400/14460GY	120	0.3 W,X,M,Y,Z/1.2ZZ	1.1	1.25	1500	15	110	34	2.5
753462100	100:1	12000/12000GY	120	0.3 W,X,M,Y,Z/1.2ZZ	1.1	1.25	1500	15	110	34	2.5
753462110	110:1	13200/13200GY	120	0.3 W,X,M,Y,Z/1.2ZZ	1.1	1.25	1500	15	110	34	2.5
753462120	120:1	14400/14400GY	120	0.3 W,X,M,Y,Z/1.2ZZ	1.1	1.25	1500	15	110	34	2.5

All Units can be supplied either switchgear style, fuse clips only or fuses and clips. Please contact your commercial representant for further information.
Additional ratings available upon request.

Notes:

UCI-17

15 kV VOLTAGE TRANSFORMER

UL Recognized Component

INDOOR
60 Hertz

ARTECHE UC/UX/VC series are dry type indoor service voltage transformers. The core is encapsulated with Type B epoxy resin which provides excellent internal dielectric properties and mechanical strength, ensuring a long mechanical and electrical life. The transformer is maintenance free.

The core is built with high permeability grain oriented silicon steel laminations for low losses. The windings are copper wire with copper plate double isolation. The concentric distribution of the coils prevents magnetic flux leakage, achieving greater accuracy and higher capacity to withstand mechanical stresses in adverse operating conditions.

Partial Discharge measurements exceed the IEEE, CAN/CSA and IEC requirements.

Mechanical characteristics		
Insulation Material	Colors	Weight (lbs.)
Resin	Gray*	60

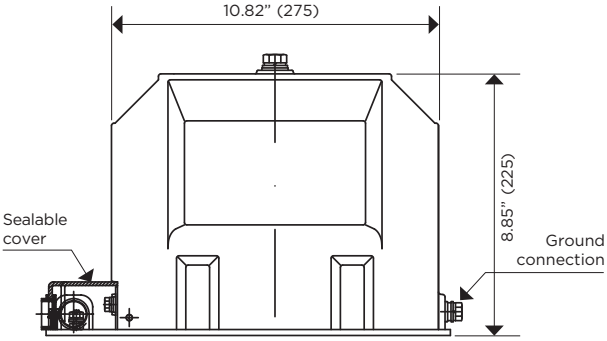

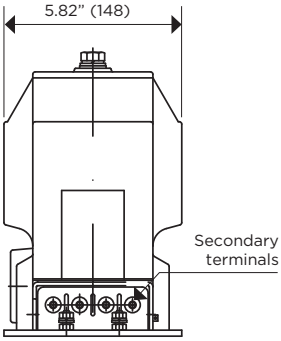

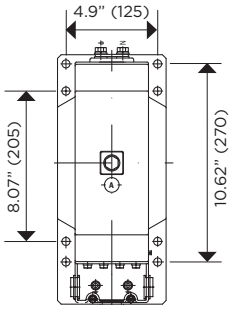

Drawing number: 4286160

	ONE SECONDARY
MARKING (Single Primary Ratio)	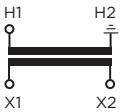

Approximate dimensions in inches (mm).
* Brown color available upon request

UCI-17

15 kV VOLTAGE TRANSFORMER

Electrical characteristics

Code	Ratio	Primary (V)	Secon-dary (V)	IEEE Metering Accuracy	Continuous Rated Voltage Factor (Un)	Rated Voltage Factor 30 s (Un)	Thermal Burden (VA)	Nominal Voltage System (kV)	BIL (kV)	Power-Frequency Withstand Voltage (1 min)	
										Primary & Secondary (kV_{rms})	Secondary Winding (kV_{rms})
753381060	60:1	7200/12470GY	120	0.3 W,X,M,Y	1.1	1.25	450	15	110	34	2.5
753381063	63.5:1	7620/13200GY	120	0.6 W,X,M,Y	1.1	1.25	450	15	110	34	2.5
753381070	70:1	8400/14550GY	120	0.6 W,X,M,Y	1.1	1.25	450	15	110	34	2.5

Additional ratings available upon request.

Notes:

UXL-17

15 kV VOLTAGE TRANSFORMER

UL Recognized Component

INDOOR
60 Hertz

ARTECHE UC/UX/VC series are dry type indoor service voltage transformers. The core is encapsulated with Type B epoxy resin which provides excellent internal dielectric properties and mechanical strength, ensuring a long mechanical and electrical life. The transformer is maintenance free.

The core is built with high permeability grain oriented silicon steel laminations for low losses. The windings are copper wire with copper plate double isolation. The concentric distribution of the coils prevents magnetic flux leakage, achieving greater accuracy and higher capacity to withstand mechanical stresses in adverse operating conditions.

Partial Discharge measurements exceed the IEEE, CAN/CSA and IEC requirements.

Mechanical characteristics		
Insulation Material	Colors	Weight (lbs.)
Resin	Gray*	60

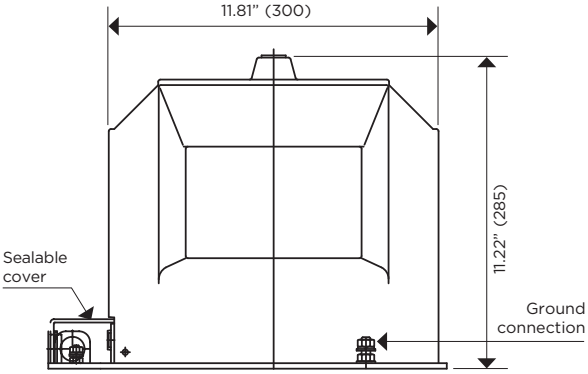

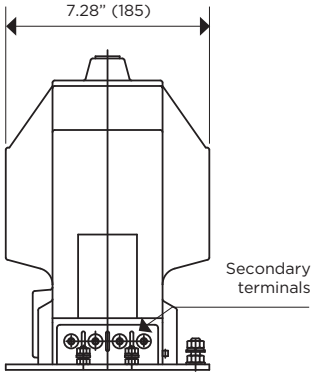

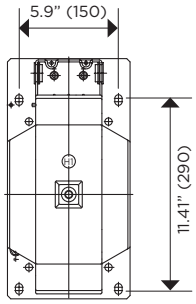

Drawing number: 4286157

	ONE SECONDARY
MARKING (Single Primary Ratio)	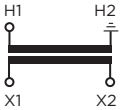

Approximate dimensions in inches (mm).
* Brown color available upon request

UXL-17

15 kV VOLTAGE TRANSFORMER

Electrical characteristics

Code	Ratio	Primary (V)	Secondary (V)	IEEE Metering Accuracy	Continuous Rated Voltage Factor (Un)	Rated Voltage Factor 30 s (Un)	Thermal Burden (VA)	Nominal Voltage System (kV)	BIL (kV)	Power-Frequency Withstand Voltage (1 min)	
										Primary & Secondary (kV_{rms})	Secondary Winding (kV_{rms})
753441060	60:1	7200/12470GY	120	0.3 W,X,M,Y	1.1	1.5	500	15	110	34	2.5
753441063	63.5:1	7620/13200GY	120	0.3 W,X,M,Y	1.1	1.5	500	15	110	34	2.5
753441070	70:1	8400/14550GY	120	0.3 W,X,M,Y	1.1	1.5	500	15	110	34	2.5

Additional ratings available upon request.

Notes:

VCE-17

15 kV VOLTAGE TRANSFORMER

INDOOR
60 Hertz

UL Recognized Component

ARTECHE UC/UX/VC series are dry type indoor service voltage transformers. The core is encapsulated with Type B epoxy resin which provides excellent internal dielectric properties and mechanical strength, ensuring a long mechanical and electrical life. The transformer is maintenance free.

The core is built with high permeability grain oriented silicon steel laminations for low losses. The windings are copper wire with copper plate double isolation. The concentric distribution of the coils prevents magnetic flux leakage, achieving greater accuracy and higher capacity to withstand mechanical stresses in adverse operating conditions.

Partial Discharge measurements exceed the IEEE, CAN/CSA and IEC requirements.

Mechanical characteristics

Insulation Material	Colors	Weight (lbs.)
Resin	Gray*	85

Unfused

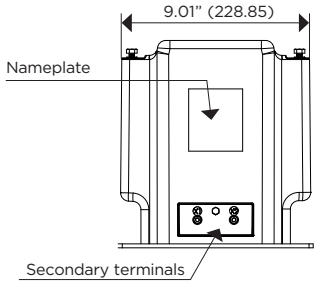

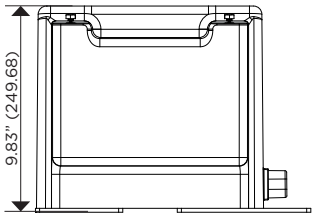

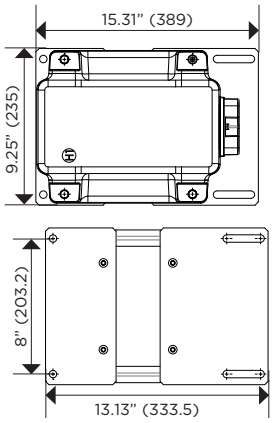

Drawing number: 4287539

Fused

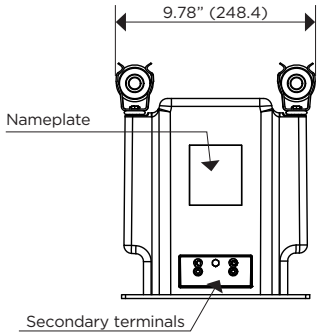

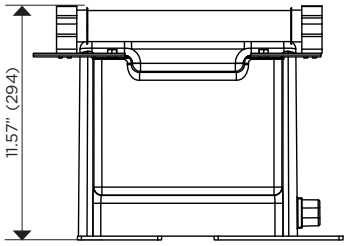

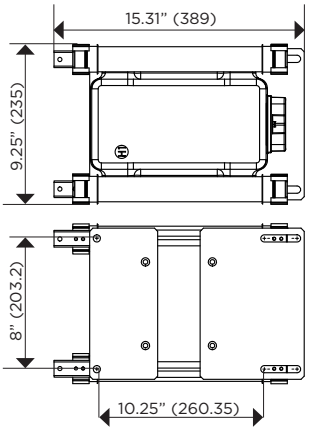

Drawing number: 4286372

	ONE SECONDARY
MARKING (Single Primary Ratio)	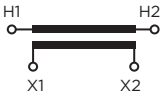

Approximate dimensions in inches (mm).
* Brown color available upon request

VCE-17

15 kV VOLTAGE TRANSFORMER

Electrical characteristics

Code	Ratio	Primary (V)	Secon-dary (V)	IEEE Metering Accuracy	Continuous Rated Voltage Factor (Un)	Rated Voltage Factor 30 s (Un)	Thermal Burden (VA)	Nominal Voltage System (kV)	BIL (kV)	Power-Frequency Withstand Voltage (1 min)	
										Primary & Secondary (kV_{rms})	Secondary Winding (kV_{rms})
Switchgear style (no fuse)											
753450060	60:1	7200/12470Y	120	0.3 W,X,M,Y,Z/1.2ZZ	1.1	1.25	1500	15	110	34	2.5
753450070	70:1	8400/14460Y	120	0.3 W,X,M,Y,Z/1.2ZZ	1.1	1.25	1500	15	110	34	2.5
753450100	100:1	12000/12000Y	120	0.3 W,X,M,Y,Z/1.2ZZ	1.1	1.25	1500	15	110	34	2.5
753450110	110:1	13200/13200Y	120	0.3 W,X,M,Y,Z/1.2ZZ	1.1	1.25	1500	15	110	34	2.5
753450120	120:1	14400/14400Y	120	0.3 W,X,M,Y,Z/1.2ZZ	1.1	1.25	1500	15	110	34	2.5
Fuse clips only (no fuse)											
753451060	60:1	7200/12470Y	120	0.3 W,X,M,Y,Z/1.2ZZ	1.1	1.25	1500	15	110	34	2.5
753451070	70:1	8400/14460Y	120	0.3 W,X,M,Y,Z/1.2ZZ	1.1	1.25	1500	15	110	34	2.5
753451100	100:1	12000/12000Y	120	0.3 W,X,M,Y,Z/1.2ZZ	1.1	1.25	1500	15	110	34	2.5
753451110	110:1	13200/13200Y	120	0.3 W,X,M,Y,Z/1.2ZZ	1.1	1.25	1500	15	110	34	2.5
753451120	120:1	14400/14400Y	120	0.3 W,X,M,Y,Z/1.2ZZ	1.1	1.25	1500	15	110	34	2.5
Fuse clips and fuse											
753452060	60:1	7200/12470Y	120	0.3 W,X,M,Y,Z/1.2ZZ	1.1	1.25	1500	15	110	34	2.5
753452070	70:1	8400/14460Y	120	0.3 W,X,M,Y,Z/1.2ZZ	1.1	1.25	1500	15	110	34	2.5
753452100	100:1	12000/12000Y	120	0.3 W,X,M,Y,Z/1.2ZZ	1.1	1.25	1500	15	110	34	2.5
753452110	110:1	13200/13200Y	120	0.3 W,X,M,Y,Z/1.2ZZ	1.1	1.25	1500	15	110	34	2.5
753452120	120:1	14400/14400Y	120	0.3 W,X,M,Y,Z/1.2ZZ	1.1	1.25	1500	15	110	34	2.5

All Units can be supplied either switchgear style, fuse clips only or fuses and clips. Please contact your commercial representant for further information.
Additional ratings available upon request.

Notes:

VCL-17

15 kV VOLTAGE TRANSFORMER

UL Recognized Component

INDOOR
60 Hertz

ARTECHE UC/UX/VC series are dry type indoor service voltage transformers. The core is encapsulated with Type B epoxy resin which provides excellent internal dielectric properties and mechanical strength, ensuring a long mechanical and electrical life. The transformer is maintenance free.

The core is built with high permeability grain oriented silicon steel laminations for low losses. The windings are copper wire with copper plate double isolation. The concentric distribution of the coils prevents magnetic flux leakage, achieving greater accuracy and higher capacity to withstand mechanical stresses in adverse operating conditions.

Partial Discharge measurements exceed the IEEE, CAN/CSA and IEC requirements.

Mechanical characteristics		
Insulation Material	Colors	Weight (lbs.)
Resin	Gray*	62

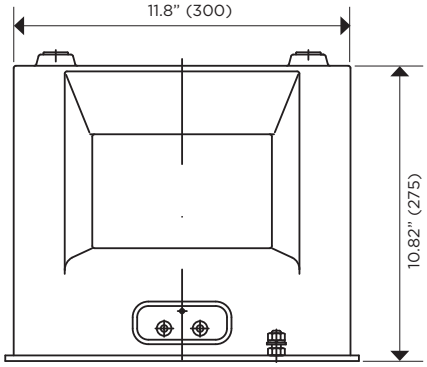

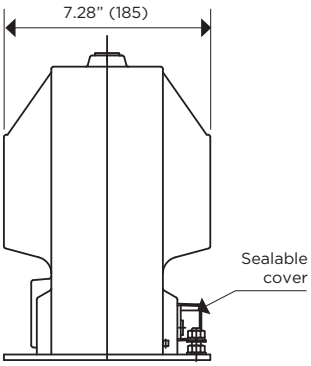

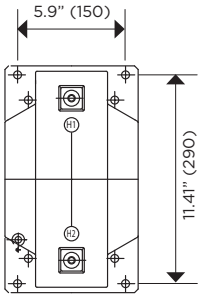

Drawing number: 4286156

	ONE SECONDARY
MARKING (Single Primary Ratio)	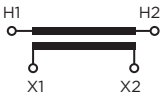

Approximate dimensions in inches (mm).
* Brown color available upon request

VCL-17

15 kV VOLTAGE TRANSFORMER

Electrical characteristics

Code	Ratio	Primary (V)	Secondary (V)	IEEE Metering Accuracy	Continuous Rated Voltage Factor (Un)	Rated Voltage Factor 30 s (Un)	Thermal Burden (VA)	Nominal Voltage System (kV)	BIL (kV)	Power-Frequency Withstand Voltage (1 min)	
										Primary & Secondary (kV_{rms})	Secondary Winding (kV_{rms})
753501060	60:1	7200/12470Y	120	0.3 W,X,M,Y	1.1	1.25	600	15	110	34	2.5
753501063	63.5:1	7620/13200Y	120	0.3 W,X,M,Y	1.1	1.25	600	15	110	34	2.5
753501070	70:1	8400/14450Y	120	0.3 W,X,M,Y	1.1	1.25	600	15	110	34	2.5
753501100	100:1	12000/12000Y	120	0.3 W,X,M,Y	1.1	1.25	600	15	110	34	2.5
753501110	110:1	13200/13200Y	120	0.3 W,X,M,Y	1.1	1.25	600	15	110	34	2.5
753501120	120:1	14400/14400Y	120	0.3 W,X,M,Y	1.1	1.25	600	15	110	34	2.5

Additional ratings available upon request.

Notes:

UXL-24

25 kV VOLTAGE TRANSFORMER

INDOOR
60 Hertz

UL Recognized Component

ARTECHE UC/UX/VC series are dry type indoor service voltage transformers. The core is encapsulated with Type B epoxy resin which provides excellent internal dielectric properties and mechanical strength, ensuring a long mechanical and electrical life. The transformer is maintenance free.

The core is built with high permeability grain oriented silicon steel laminations for low losses. The windings are copper wire with copper plate double isolation. The concentric distribution of the coils prevents magnetic flux leakage, achieving greater accuracy and higher capacity to withstand mechanical stresses in adverse operating conditions.

Partial Discharge measurements exceed the IEEE, CAN/CSA and IEC requirements.

Mechanical characteristics		
Insulation Material	Colors	Weight (lbs.)
Resin	Gray*	60

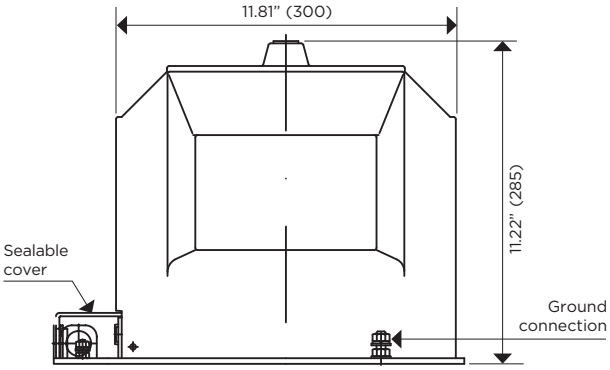

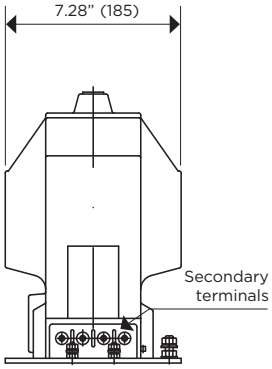

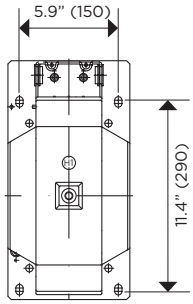

Drawing number: 4286159

	ONE SECONDARY
MARKING (Single Primary Ratio)	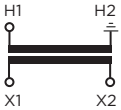

Approximate dimensions in inches (mm).
* Brown color available upon request

UXL-24

25 kV VOLTAGE TRANSFORMER

Electrical characteristics

Code	Ratio	Primary (V)	Secon-dary (V)	IEEE Metering Accuracy	Continuous Rated Voltage Factor (Un)	Rated Voltage Factor 30 s (Un)	Thermal Burden (VA)	Nominal Voltage System (kV)	BIL (kV)	Power-Frequency Withstand Voltage (1 min)	
										Primary & Secondary (kV_{rms})	Secondary Winding (kV_{rms})
753741100	100:1	12000/20750GY	120	0.3 W,X,M,Y	1.1	1.5	600	25	125	50	2.5
753741120	120:1	14400/24940GY	120	0.3 W,X,M,Y	1.1	1.5	600	25	125	50	2.5
753741200	200:1	24000/24000GY	120	0.3 W,X,M,Y	1.1	1.5	600	25	125	50	2.5

Additional ratings available upon request.

Notes:

UCJ-24

25 kV VOLTAGE TRANSFORMER

UL Recognized Component

INDOOR
60 Hertz

ARTECHE UC/UX/VC series are dry type indoor service voltage transformers. The core is encapsulated with Type B epoxy resin which provides excellent internal dielectric properties and mechanical strength, ensuring a long mechanical and electrical life. The transformer is maintenance free.

The core is built with high permeability grain oriented silicon steel laminations for low losses. The windings are copper wire with copper plate double isolation. The concentric distribution of the coils prevents magnetic flux leakage, achieving greater accuracy and higher capacity to withstand mechanical stresses in adverse operating conditions.

Partial Discharge measurements exceed the IEEE, CAN/CSA and IEC requirements.

Mechanical characteristics		
Insulation Material	Colors	Weight (lbs.)
Resin	Gray*	66

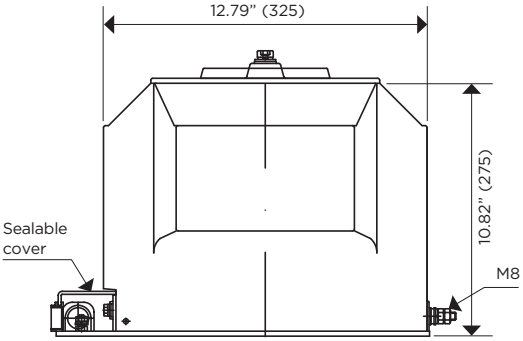

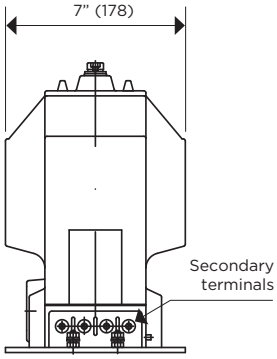

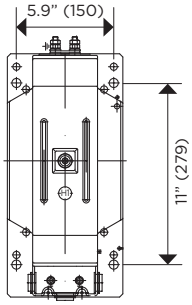

Drawing number: 4286163

	ONE SECONDARY
MARKING (Single Primary Ratio)	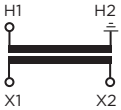

Approximate dimensions in inches (mm).
* Brown color available upon request

UCJ-24

25 kV VOLTAGE TRANSFORMER

Electrical characteristics

Code	Marked Ratio	Primary (V)	Secon-dary (V)	IEEE Metering Accuracy	Continuous Rated Voltage Factor (Un)	Rated Voltage Factor 30 s (Un)	Thermal Burden (VA)	Nominal Voltage System (kV)	BIL (kV)	Power-Frequency Withstand Voltage (1 min)	
										Primary & Secondary (kV_{rms})	Secondary Winding (kV_{rms})
753541100	100:1	12000/20750GY	120	0.3 W,X,M,Y	1.1	1.5	750	25	125	50	2.5
753541120	120:1	14400/24940GY	120	0.3 W,X,M,Y	1.1	1.5	750	25	125	50	2.5
753541200	200:1	24000/24000GY	120	0.3 W,X,M,Y	1.1	1.5	750	25	125	50	2.5

Additional ratings available upon request.

Notes:

UEI-24

25 kV VOLTAGE TRANSFORMER

INDOOR
60 Hertz

UL Recognized Component

ARTECHE UE series are dry type indoor service voltage transformers. The core is encapsulated with Type B epoxy resin which provides excellent internal dielectric properties and mechanical strength, ensuring a long mechanical and electrical life. The transformer is maintenance free.

The entire surface of the transformer is coated with a conductive layer that is intended to be solidly grounded when energized. This allows for compact mounting inside switchgear or enclosures.

The core is built with high permeability grain oriented silicon steel laminations for low losses. The windings are copper wire with copper plate double isolation. The concentric distribution of the coils prevents magnetic flux leakage, achieving greater accuracy and higher capacity to withstand mechanical stresses in adverse operating conditions.

Partial Discharge measurements exceed the IEEE, CAN/CSA and IEC requirements.

Mechanical characteristics

Insulation Material	Colors	Weight (lbs.)
Resin	Gray	62

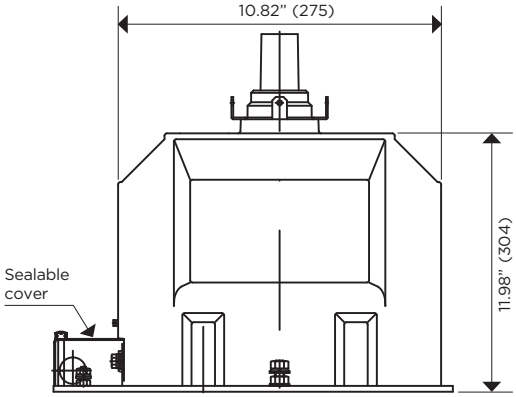

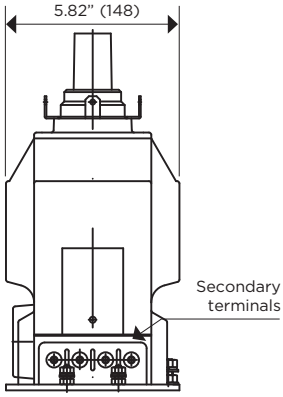

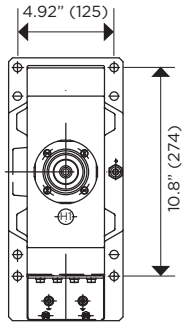

Drawing number: 4286164

	ONE SECONDARY
MARKING (Single Primary Ratio)	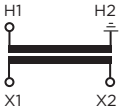

Approximate dimensions in inches (mm).

UEI-24

25 kV VOLTAGE TRANSFORMER

Electrical characteristics

Code	Ratio	Primary (V)	Secondary (V)	IEEE Metering Accuracy	Continuous Rated Voltage Factor (Un)	Rated Voltage Factor 30 s (Un)	Thermal Burden (VA)	Nominal Voltage System (kV)	BIL (kV)	Power-Frequency Withstand Voltage (1 min)	
										Primary & Secondary (kV_{rms})	Secondary Winding (kV_{rms})
753681100	100:1	12000/20780GY	120	0.6 W,X,M	1.1	1.25	350	25	125	50	2.5
753681120	120:1	14400/24940GY	120	0.6 W,X,M	1.1	1.25	350	25	125	50	2.5

Additional ratings available upon request.

Notes:

VCL-24

25 kV VOLTAGE TRANSFORMER

UL Recognized Component

INDOOR
60 Hertz

ARTECHE UC/UX/VC series are dry type indoor service voltage transformers. The core is encapsulated with Type B epoxy resin which provides excellent internal dielectric properties and mechanical strength, ensuring a long mechanical and electrical life. The transformer is maintenance free.

The core is built with high permeability grain oriented silicon steel laminations for low losses. The windings are copper wire with copper plate double isolation. The concentric distribution of the coils prevents magnetic flux leakage, achieving greater accuracy and higher capacity to withstand mechanical stresses in adverse operating conditions.

Partial Discharge measurements exceed the IEEE, CAN/CSA and IEC requirements.

Mechanical characteristics		
Insulation Material	Colors	Weight (lbs.)
Resin	Gray*	62

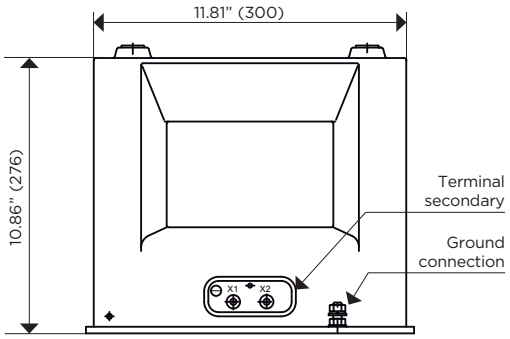

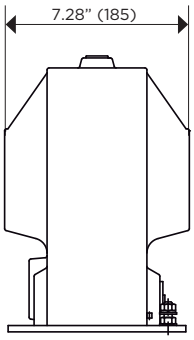

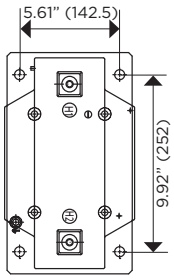

Drawing number: 4286158

	ONE SECONDARY
MARKING (Single Primary Ratio)	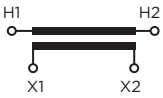

Approximate dimensions in inches (mm).
* Brown color available upon request

VCL-24

25 kV VOLTAGE TRANSFORMER

Electrical characteristics

Code	Ratio	Primary (V)	Secondary (V)	IEEE Metering Accuracy	Continuous Rated Voltage Factor (Un)	Rated Voltage Factor 30 s (Un)	Thermal Burden (VA)	Nominal Voltage System (kV)	BIL (kV)	Power-Frequency Withstand Voltage (1 min)	
										Primary & Secondary (kV_{rms})	Secondary Winding (kV_{rms})
753801100	100:1	12000/20750Y	120	0.3 W,X,M,Y	1.1	1.25	600	25	125	50	2.5
753801120	120:1	14400/24940Y	120	0.3 W,X,M,Y	1.1	1.25	600	25	125	50	2.5
753801200	200:1	24000/24000Y	120	0.3 W,X,M,Y	1.1	1.25	600	25	125	50	2.5

Additional ratings available upon request.

Notes:

UXN-36

34.5 kV VOLTAGE TRANSFORMER

UL Recognized Component

INDOOR
60 Hertz

ARTECHE UC/UX/VC series are dry type indoor service voltage transformers. The core is encapsulated with Type B epoxy resin which provides excellent internal dielectric properties and mechanical strength, ensuring a long mechanical and electrical life. The transformer is maintenance free.

The core is built with high permeability grain oriented silicon steel laminations for low losses. The windings are copper wire with copper plate double isolation. The concentric distribution of the coils prevents magnetic flux leakage, achieving greater accuracy and higher capacity to withstand mechanical stresses in adverse operating conditions.

Partial Discharge measurements exceed the IEEE, CAN/CSA and IEC requirements.

Mechanical characteristics		
Insulation Material	Colors	Weight (lbs.)
Resin	Gray*	97

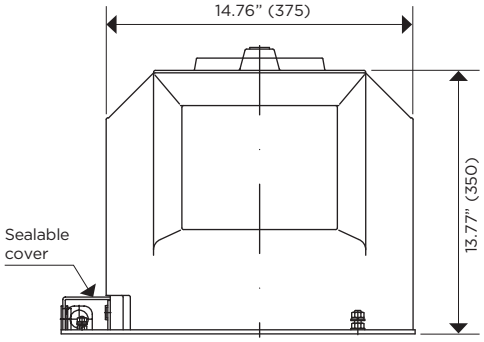

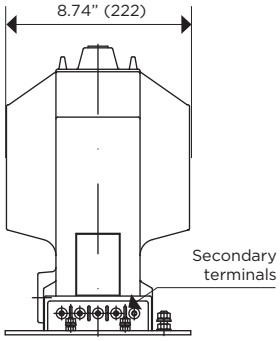

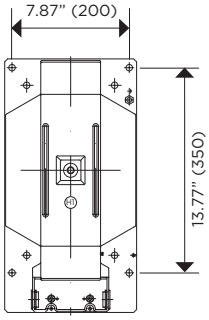

Drawing number: 4286161

	ONE SECONDARY
MARKING (Single Primary Ratio)	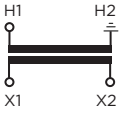

Approximate dimensions in inches (mm).
* Brown color available upon request

UXN-36

34.5 kV VOLTAGE TRANSFORMER

Electrical characteristics

Code	Ratio	Primary (V)	Secondary (V)	IEEE Metering Accuracy	Continuous Rated Voltage Factor (Un)	Rated Voltage Factor 30 s (Un)	Thermal Burden (VA)	Nominal Voltage System (kV)	BIL (kV)	Power-Frequency Withstand Voltage (1 min)	
										Primary & Secondary (kV_{rms})	Secondary Winding (kV_{rms})
754391175	175:1	20125/34500GY	115	0.3 W,X,M,Y	1.1	1.5	750	34.5	200	70	2.5

Additional ratings available upon request.

Notes:

UCS-36

34.5 kV VOLTAGE TRANSFORMER

Unfused Fused

INDOOR
60 Hertz

UL Recognized Component

ARTECHE UC/UX/VC series are dry type indoor service voltage transformers. The core is encapsulated with Type B epoxy resin which provides excellent internal dielectric properties and mechanical strength, ensuring a long mechanical and electrical life. The transformer is maintenance free.

The core is built with high permeability grain oriented silicon steel laminations for low losses. The windings are copper wire with copper plate double isolation. The concentric distribution of the coils prevents magnetic flux leakage, achieving greater accuracy and higher capacity to withstand mechanical stresses in adverse operating conditions.

Partial Discharge measurements exceed the IEEE, CAN/CSA and IEC requirements.

Mechanical characteristics

Insulation Material	Colors	Weight (lbs.)
Resin	Gray*	167

Unfused

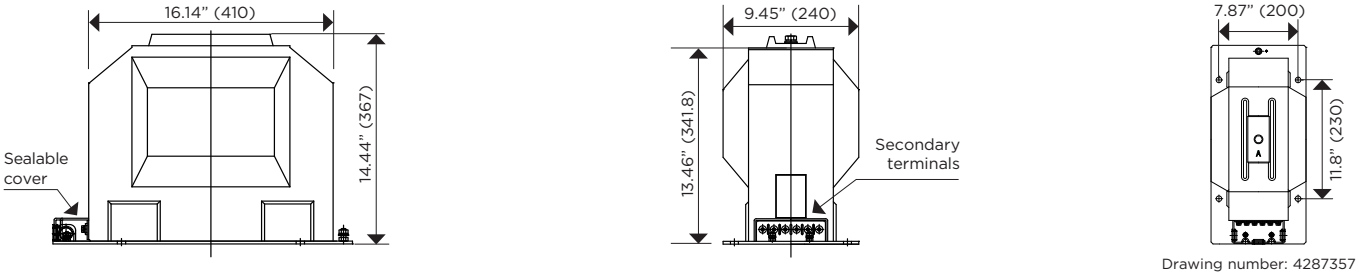

Drawing number: 4287357

Fused

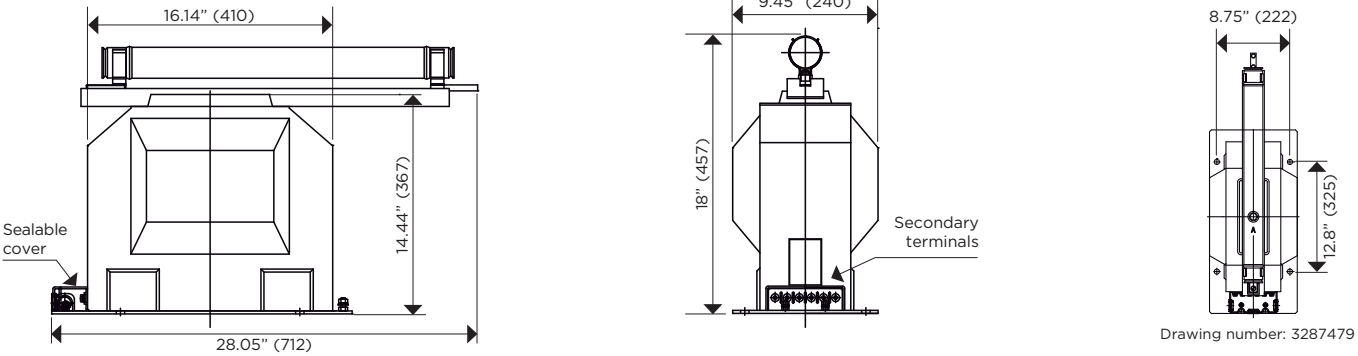

Drawing number: 3287479

MARKING (Single Primary Ratio)	ONE SECONDARY

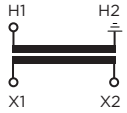

Approximate dimensions in inches (mm).
* Brown color available upon request

UCS-36

34.5 kV VOLTAGE TRANSFORMER

Electrical characteristics

Code	Ratio	Primary (V)	Secon-dary (V)	IEEE Metering Accuracy	Continuous Rated Voltage Factor (Un)	Rated Voltage Factor 30 s (Un)	Thermal Burden (VA)	Nominal Voltage System (kV)	BIL (kV)	Power-Frequency Withstand Voltage (1 min)	
										Primary & Secondary (kV_{rms})	Secondary Winding (kV_{rms})
UNFUSED											
754260175	175:1	20125/34500GY	115	0.3 W,X,M,Y,Z	1.1	1.5	1500	34.5	200	70	2.5
754260300	300:1	34500/34500GY	115	0.3 W,X,M,Y,Z	1.1	1.5	1500	34.5	200	70	2.5
754260289	289:1	19942/34500GY	69	0.3 W,X,M,Y	1.1	1.5	1500	34.5	200	70	2.5
754260240	240:1	16100/27900GY	67.08	0.3 W,X,M,Y	1.1	1.5	1500	34.5	200	70	2.5
FUSED											
754262175	175:1	20125/34500GY	115	0.3 W,X,M,Y,Z	1.1	1.5	1500	34.5	200	70	2.5
754262300	300:1	34500/34500GY	115	0.3 W,X,M,Y,Z	1.1	1.5	1500	34.5	200	70	2.5
754262200	200:1	24000/24000GY	120	0.3 W,X,M,Y,Z	1.1	1.5	1500	34.5	200	70	2.5
754262208	208.33:1	25000/25000GY	120	0.3 W,X,M,Y,Z	1.1	1.5	1500	34.5	200	70	2.5
754262220	220:1	26400/26400GY	120	0.3 W,X,M,Y,Z	1.1	1.5	1500	34.5	200	70	2.5
754262207	207.5:1	24900/24900GY	120	0.3 W,X,M,Y,Z	1.1	1.5	1500	34.5	200	70	2.5
754262240	240:1	27600/27600GY	115	0.3 W,X,M,Y,Z	1.1	1.5	1500	34.5	200	70	2.5

Additional ratings available upon request.

Notes:

VCN-36

34.5 kV VOLTAGE TRANSFORMER

UL Recognized Component

INDOOR
60 Hertz

ARTECHE UC/UX/VC series are dry type indoor service voltage transformers. The core is encapsulated with Type B epoxy resin which provides excellent internal dielectric properties and mechanical strength, ensuring a long mechanical and electrical life. The transformer is maintenance free.

The core is built with high permeability grain oriented silicon steel laminations for low losses. The windings are copper wire with copper plate double isolation. The concentric distribution of the coils prevents magnetic flux leakage, achieving greater accuracy and higher capacity to withstand mechanical stresses in adverse operating conditions.

Partial Discharge measurements exceed the IEEE, CAN/CSA and IEC requirements.

Mechanical characteristics		
Insulation Material	Colors	Weight (lbs.)
Resin	Gray*	99

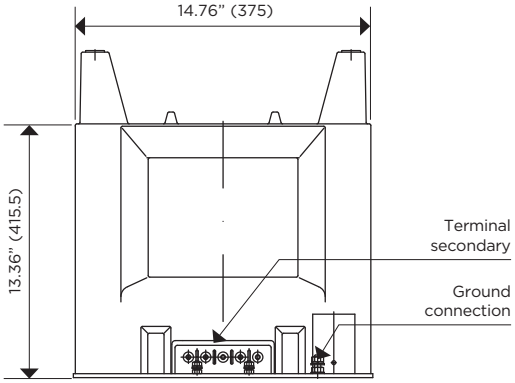

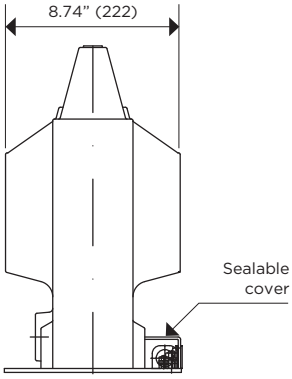

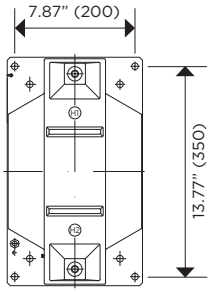

Drawing number: 4286162

	ONE SECONDARY
MARKING (Single Primary Ratio)	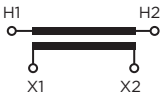

Approximate dimensions in inches (mm).
* Brown color available upon request

VCN-36

34.5 kV VOLTAGE TRANSFORMER

Electrical characteristics											
Code	Ratio	Primary (V)	Secondary (V)	IEEE Metering Accuracy	Continuous Rated Voltage Factor (Un)	Rated Voltage Factor 30 s (Un)	Thermal Burden (VA)	Nominal Voltage System (kV)	BIL (kV)	Power-Frequency Withstand Voltage (1 min)	
										Primary & Secondary (kV_{rms})	Secondary Winding (kV_{rms})
754421300	300:1	34500/34500Y	120	0.3 W,X,M,Y	1.1	1.5	751	34.5	200	70	2.5

Additional ratings available upon request.

Notes:

VCS-36

34.5 kV VOLTAGE TRANSFORMER

Unfused Fused

INDOOR
60 Hertz

UL Recognized Component

ARTECHE UC/UX/VC series are dry type indoor service voltage transformers. The core is encapsulated with Type B epoxy resin which provides excellent internal dielectric properties and mechanical strength, ensuring a long mechanical and electrical life. The transformer is maintenance free.

The core is built with high permeability grain oriented silicon steel laminations for low losses. The windings are copper wire with copper plate double isolation. The concentric distribution of the coils prevents magnetic flux leakage, achieving greater accuracy and higher capacity to withstand mechanical stresses in adverse operating conditions.

Partial Discharge measurements exceed the IEEE, CAN/CSA and IEC requirements.

Mechanical characteristics

Insulation Material	Colors	Weight (lbs.)
Resin	Gray*	174

Unfused

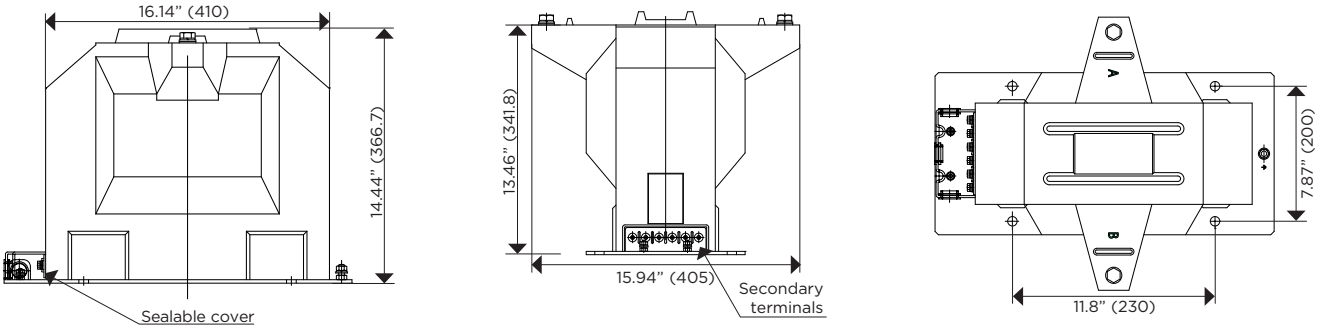

Drawing number: 4287358

Fused

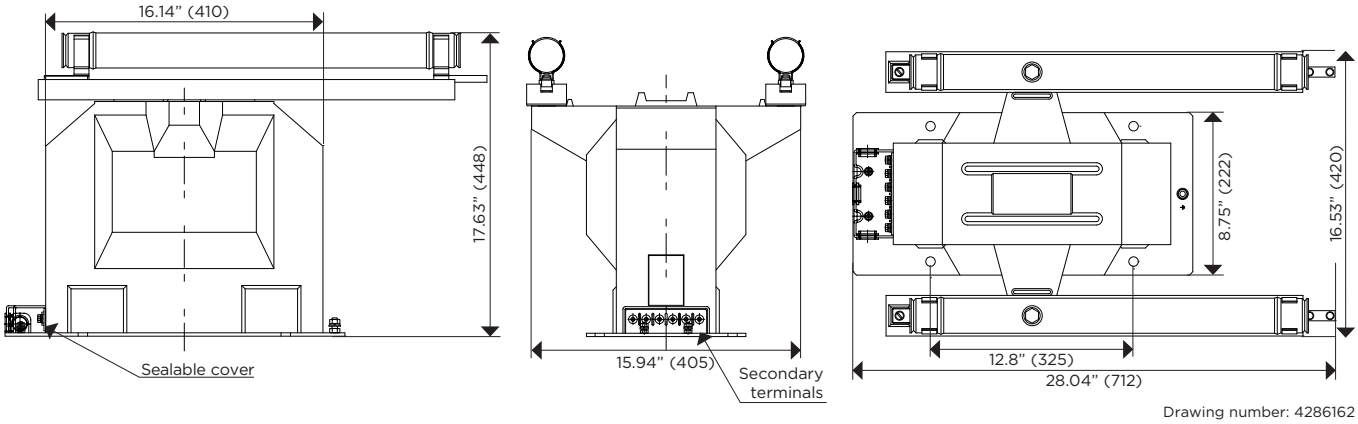

Drawing number: 4286162

	ONE SECONDARY
MARKING (Single Primary Ratio)	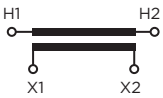

Approximate dimensions in inches (mm).
* Brown color available upon request

VCS-36

34.5 kV VOLTAGE TRANSFORMER

Electrical characteristics

Code	Ratio	Primary (V)	Secondary (V)	IEEE Metering Accuracy	Continuous Rated Voltage Factor (Un)	Rated Voltage Factor 30 s (Un)	Thermal Burden (VA)	Nominal Voltage System (kV)	BIL (kV)	Power-Frequency Withstand Voltage (1 min)	
										Primary & Secondary (kV_{rms})	Secondary Winding (kV_{rms})
UNFUSED											
754610175	175:1	20125/34500Y	115	0.3 W,X,M,Y,Z	1.1	1.5	1500	34.5	200	70	2.5
754610240	240:1	27600/27600Y	115	0.3 W,X,M,Y,Z	1.1	1.5	1500	34.5	200	70	2.5
754610300	300:1	34500/34500Y	115	0.3 W,X,M,Y,Z	1.1	1.5	1500	34.5	200	70	2.5
FUSED											
754612175	175:1	20125/34500Y	115	0.3 W,X,M,Y,Z	1.1	1.5	1500	34.5	200	70	2.5
754612240	240:1	27600/27600Y	115	0.3 W,X,M,Y,Z	1.1	1.5	1500	34.5	200	70	2.5
754612300	300:1	34500/34500Y	115	0.3 W,X,M,Y,Z	1.1	1.5	1500	34.5	200	70	2.5

Additional ratings available upon request.

Notes:

CID-7

5 kV CURRENT TRANSFORMER

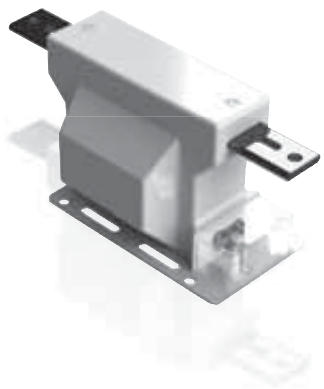

INDOOR
60 Hertz

ARTECHE AC/CID Series are dry type indoor service current transformers. The core is encapsulated with Type B epoxy resin which provides excellent internal dielectric properties and mechanical strength, ensuring a long mechanical and electrical life. The transformer is maintenance free.

The core is built with high permeability grain oriented silicon steel laminations for low losses. The windings are copper wire with copper plate double isolation. The concentric distribution of the coils prevents magnetic flux leakage, achieving greater accuracy and higher capacity to withstand mechanical stresses in adverse operating conditions.

Partial discharge measurements exceed IEEE C57.13 2008 requirements.

Mechanical characteristics		
Insulation Material	Colors	Weight (lbs.)
Resin	Gray *	38

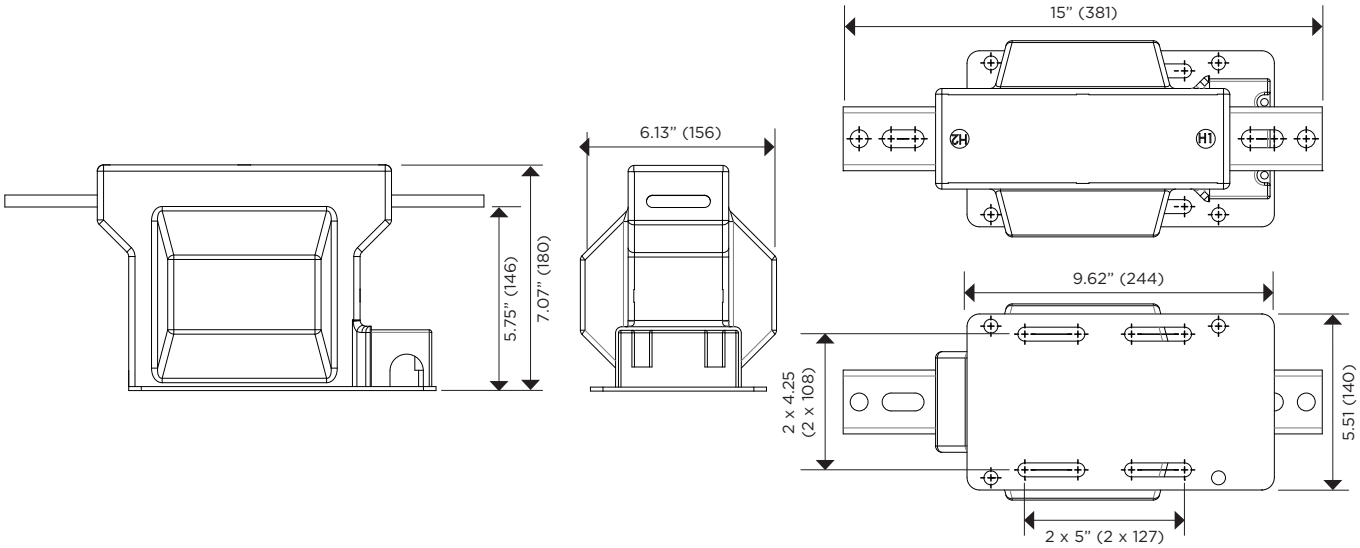

Drawing number: 4287524

	ONE SECONDARY
MARKING (Single Primary Ratio)	

Approximate dimensions in inches (mm).
* Brown color available upon request

CID-7

5 kV CURRENT TRANSFORMER

Electrical characteristics

Code	Current Ratio (Primary: Secondary) (A)	Continuous Thermal Current Rating Factor @ 30°C	Short-time Thermal Current (kA/1s)	Short-time Mechanical Current (kA_{peak})	IEEE Metering Accuracy	Relay Accuracy	Highest Nominal Voltage System (kV)	BIL (kV)	Power-Frequency Withstand Voltage (1 min)	
									Primary & Secondary (kV_{rms})	Secondary Winding (kV_{rms})
750951001	5:5	1.5	0.5	1.35	0.3 B1.8	T-100	5	60	19	2.5
750951002	10:5	1.5	1	2.7	0.3 B1.8	T-100	5	60	19	2.5
750951003	15:5	1.5	1.5	4.05	0.3 B1.8	T-100	5	60	19	2.5
750951004	20:5	1.5	2	5.4	0.3 B1.8	T-100	5	60	19	2.5
750951005	25:5	1.5	2.5	6.75	0.3 B1.8	T-100	5	60	19	2.5
750951006	30:5	1.5	3	8.1	0.3 B1.8	T-100	5	60	19	2.5
750951008	40:5	1.5	4	10.8	0.3 B1.8	T-100	5	60	19	2.5
750951010	50:5	1.5	5	13.5	0.3 B1.8	T-100	5	60	19	2.5
750951015	75:5	1.5	7.5	20.25	0.3 B1.8	T-100	5	60	19	2.5
750951020	100:5	1.5	10	27	0.3 B1.8	T-100	5	60	19	2.5
750951030	150:5	1.5	15	40.5	0.3 B1.8	T-100	5	60	19	2.5
750951040	200:5	1.5	20	54	0.3 B1.8	T-100	5	60	19	2.5
750951060	300:5	1.5	30	81	0.3 B1.8	T-100	5	60	19	2.5
750951080	400:5	1.5	40	108	0.3 B1.8	T-100	5	60	19	2.5
750951120	600:5	1.5	60	162	0.3 B1.8	T-100	5	60	19	2.5
750951160	800:5	1.5	80	216	0.3 B1.8	T-100	5	60	19	2.5
750951200	1000:5	1.5	100	270	0.3 B1.8	T-100	5	60	19	2.5
750951240	1200:5	1.5	120	324	0.3 B1.8	T-100	5	60	19	2.5

Additional ratings available upon request.

Notes:

ACD-12

8.7 kV CURRENT TRANSFORMER

UL Recognized Component

INDOOR
60 Hertz

ARTECHE AC series are dry insulated indoor service current transformers. The CT core is encapsulated with Type B epoxy resin resulting in excellent internal dielectric properties and mechanical strength. The device is maintenance free, providing a long mechanical and electrical service life.

The core of the CT is constructed from silicon steel laminations with a high permeability grain orientation resulting in low core losses. The windings are copper wire with copper plate double isolation. Concentric distribution of the CT coils prevents magnetic flux leakage, achieving greater accuracy and higher capacity to withstand mechanical stresses under adverse operating conditions.

Partial Discharge measurements exceed the IEEE, CAN/CSA and IEC requirements.

Mechanical characteristics

Insulation Material	Colors	Weight (lbs.)
Resin	Gray*	35.3

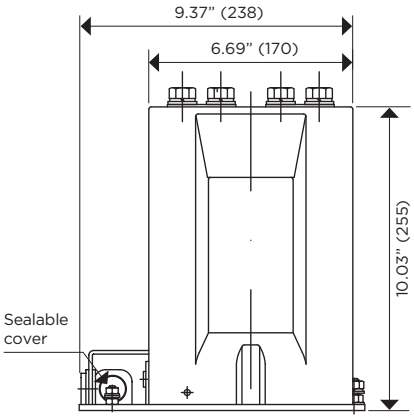

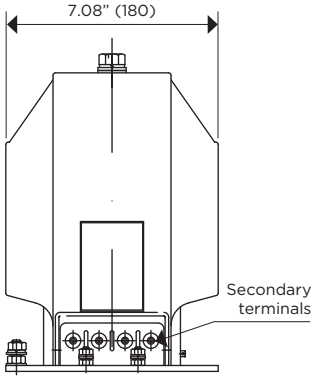

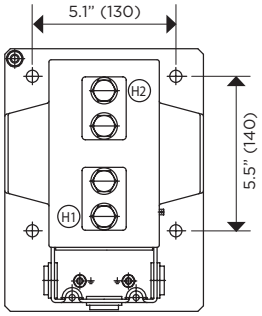

Drawing number: 4286138

	ONE SECONDARY
MARKING (Single Primary Ratio)	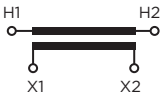

Approximate dimensions in inches (mm).
* Brown color available upon request

ACD-12

8.7 kV CURRENT TRANSFORMER

Electrical characteristics										
Code	Current Ratio (Primary: Secondary) (A)	Continuous Thermal Current Rating Factor @ 30°C	Short-time Thermal Current (kA/1s)	Short-time Mechanical Current (kA_{peak})	IEEE Metering Accuracy	Relay Accuracy	Nominal Voltage System (kV)	BIL (kV)	Power-Frequency Withstand Voltage (1 min)	
									Primary & Secondary (kV_{rms})	Secondary Winding (kV_{rms})
750251001	5:5	1.5	0.5	1	0.3 B-0.5	C-50	8.7	75	26	2.5
750251002	10:5	1.5	1	2	0.3 B-0.5	C-50	8.7	75	26	2.5
750251003	15:5	1.5	1.5	3	0.3 B-0.5	C-50	8.7	75	26	2.5
750251004	20:5	1.5	2	4	0.3 B-0.5	C-50	8.7	75	26	2.5
750251005	25:5	1.5	2.5	5	0.3 B-0.5	C-50	8.7	75	26	2.5
750251006	30:5	1.5	3	6	0.3 B-0.5	C-50	8.7	75	26	2.5
750251008	40:5	1.5	4	8	0.3 B-0.5	C-50	8.7	75	26	2.5
750251010	50:5	1.5	5	10	0.3 B-0.5	C-50	8.7	75	26	2.5
750251015	75:5	1.5	7.5	15	0.3 B-0.5	C-50	8.7	75	26	2.5
750251020	100:5	1.5	10	20	0.3 B-0.5	C-50	8.7	75	26	2.5
750251030	150:5	1.5	15	30	0.3 B-0.5	C-50	8.7	75	26	2.5
750251040	200:5	1.5	20	40	0.3 B-0.5	C-50	8.7	75	26	2.5
750251060	300:5	1.5	30	60	0.3 B-0.5	C-50	8.7	75	26	2.5
750251080	400:5	1.5	40	80	0.3 B-0.5	C-50	8.7	75	26	2.5
750251120	600:5	1.5	50	95	0.3 B-0.5	C-50	8.7	75	26	2.5
750251160	800:5	1.5	60	120	0.3 B-0.5	C-50	8.7	75	26	2.5
750251200	1000:5	1.2	75	135	0.3 B-0.5	C-50	8.7	75	26	2.5
750251240	1200:5	1.2	84	150	0.3 B-0.5	C-50	8.7	75	26	2.5

Additional ratings available upon request.

Notes:

AGPE-12

8.7 kV CURRENT TRANSFORMER

INDOOR
60 Hertz

ARTECHE AG Series are dry type indoor service current transformers. The core is encapsulated with Type B epoxy resin which provides excellent internal dielectric properties and mechanical strength, ensuring a long mechanical and electrical life. The transformer is maintenance free.

The core is built with high permeability grain oriented silicon steel laminations for low losses. The windings are copper wire with copper plate double isolation. The concentric distribution of the coils prevents magnetic flux leakage, achieving greater accuracy and higher capacity to withstand mechanical stresses in adverse operating conditions.

Partial Discharge measurements exceed the IEEE, CAN/CSA and IEC requirements.

Mechanical characteristics		
Insulation Material	Colors	Weight (lbs.)
Resin	Gray*	165.3

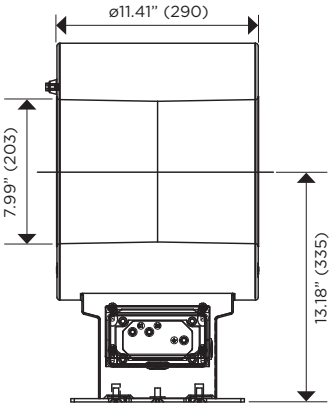

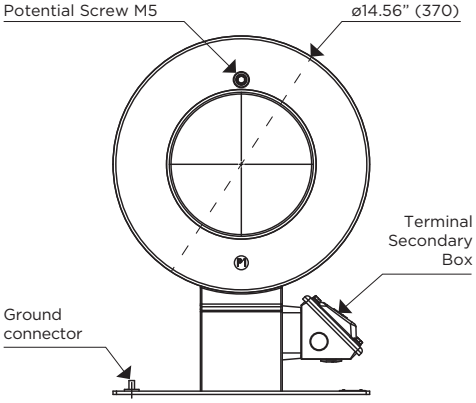

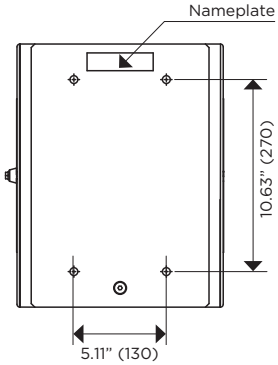

Drawing number: 4286137

	ONE SECONDARY	TWO SECONDARIES
MARKING (Single Primary Ratio)	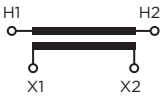	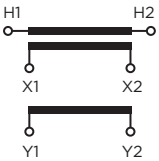

Approximate dimensions in inches (mm).
* Brown color available upon request

AGPE-12

8.7 kV CURRENT TRANSFORMER

Electrical characteristics

Code	Current Ratio (Primary: Secondary) (A)	Continuous Thermal Current Rating Factor @ 30°C	Short-time Thermal Current (kA/1s)	Short-time Mechanical Current (kA_{peak})	IEEE Metering Accuracy	Relay Accuracy	Nominal Voltage System (kV)	BIL (kV)	Power-Frequency Withstand Voltage (1 min)	
									Primary & Secondary (kV_{rms})	Secondary Winding (kV_{rms})
750231400	2000:5	1.2	63	163.8	0.3 B-1.8		8.7	75	26	2.5
750232400	2000:5	1.2	63	163.8		C-400	8.7	75	26	2.5
750231600	3000:5	1.2	63	163.8	0.3 B-1.8		8.7	75	26	2.5
750232600	3000:5	1.2	63	163.8		C-400	8.7	75	26	2.5
750233400	2000:5	1.2	63	163.8	0.3 B-1.8	C-400	8.7	75	26	2.5
750233600	3000:5	1.2	63	163.8	0.3 B-1.8	C-400	8.7	75	26	2.5
750234400	2000:5	1.2	63	163.8	0.3 B-1.8	C-200, C-200	8.7	75	26	2.5
750234600	3000:5	1.2	63	163.8	0.3 B-1.8	C-200, C-200	8.7	75	26	2.5

Additional ratings available upon request.

Notes:

ACD-17

15 kV CURRENT TRANSFORMER

UL Recognized Component

INDOOR
60 Hertz

ARTECHE AC/CID Series are dry type indoor service current transformers. The core is encapsulated with Type B epoxy resin which provides excellent internal dielectric properties and mechanical strength, ensuring a long mechanical and electrical life. The transformer is maintenance free.

The core is built with high permeability grain oriented silicon steel laminations for low losses. The windings are copper wire with copper plate double isolation. The concentric distribution of the coils prevents magnetic flux leakage, achieving greater accuracy and higher capacity to withstand mechanical stresses in adverse operating conditions.

Partial Discharge measurements exceed the IEEE, CAN/CSA and IEC requirements.

Mechanical characteristics		
Insulation Material	Colors	Weight (lbs.)
Resin	Gray*	35.3

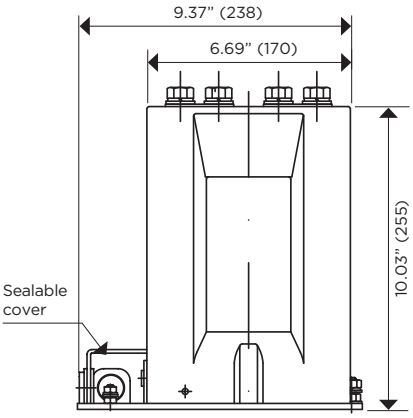

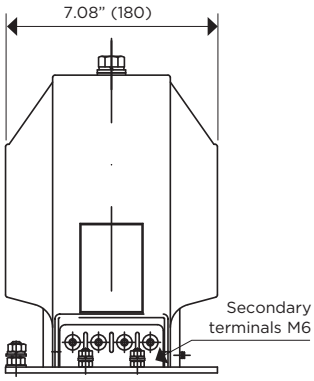

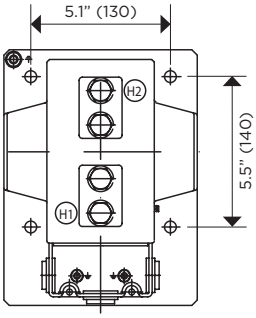

Drawing number: 4286139

	ONE SECONDARY
MARKING (Single Primary Ratio)	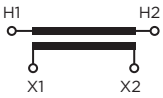

Approximate dimensions in inches (mm).
* Brown color available upon request

ACD-17

15 kV CURRENT TRANSFORMER

Electrical characteristics

Code	Current Ratio (Primary: Secondary) (A)	Continuous Thermal Current Rating Factor @ 30°C	Short-time Thermal Current (kA/1s)	Short-time Mechanical Current (kA_{peak})	IEEE Metering Accuracy	Relay Accuracy	Nominal Voltage System (kV)	BIL (kV)	Power-Frequency Withstand Voltage (1 min)	
									Primary & Secondary (kV_{rms})	Secondary Winding (kV_{rms})
750491001	5:5	1.2	0.5	1	0.3 B-0.5	C-50	15	110	34	2.5
750491002	10:5	1.2	1	2	0.3 B-0.5	C-50	15	110	34	2.5
750491003	15:5	1.2	1.5	3	0.3 B-0.5	C-50	15	110	34	2.5
750491004	20:5	1.2	2	4	0.3 B-0.5	C-50	15	110	34	2.5
750491005	25:5	1.2	2.5	5	0.3 B-0.5	C-50	15	110	34	2.5
750491006	30:5	1.2	3	6	0.3 B-0.5	C-50	15	110	34	2.5
750491008	40:5	1.2	4	8	0.3 B-0.5	C-50	15	110	34	2.5
750491010	50:5	1.2	5	10	0.3 B-0.5	C-50	15	110	34	2.5
750491015	75:5	1.2	7.5	15	0.3 B-0.5	C-50	15	110	34	2.5
750491020	100:5	1.2	10	20	0.3 B-0.5	C-50	15	110	34	2.5
750491030	150:5	1.2	15	30	0.3 B-0.5	C-50	15	110	34	2.5
750491040	200:5	1.2	20	40	0.3 B-0.5	C-50	15	110	34	2.5
750491060	300:5	1.2	30	60	0.3 B-0.5	C-50	15	110	34	2.5
750491080	400:5	1.2	40	80	0.3 B-0.5	C-50	15	110	34	2.5
750491120	600:5	1.2	50	95	0.3 B-0.5	C-50	15	110	34	2.5
750491160	800:5	1.2	60	120	0.3 B-0.5	C-50	15	110	34	2.5
750491200	1000:5	1.2	75	135	0.3 B-0.5	C-50	15	110	34	2.5
750491240	1200:5	1.2	84	150	0.3 B-0.5	C-50	15	110	34	2.5

Additional ratings available upon request.

Notes:

ACH-17

15 kV CURRENT TRANSFORMER

INDOOR
60 Hertz

UL Recognized Component

ARTECHE AC/CID Series are dry type indoor service current transformers. The core is encapsulated with Type B epoxy resin which provides excellent internal dielectric properties and mechanical strength, ensuring a long mechanical and electrical life. The transformer is maintenance free.

The core is built with high permeability grain oriented silicon steel laminations for low losses. The windings are copper wire with copper plate double isolation. The concentric distribution of the coils prevents magnetic flux leakage, achieving greater accuracy and higher capacity to withstand mechanical stresses in adverse operating conditions.

Partial Discharge measurements exceed the IEEE, CAN/CSA and IEC requirements.

Mechanical characteristics		
Insulation Material	Colors	Weight (lbs.)
Resin	Gray*	63.8

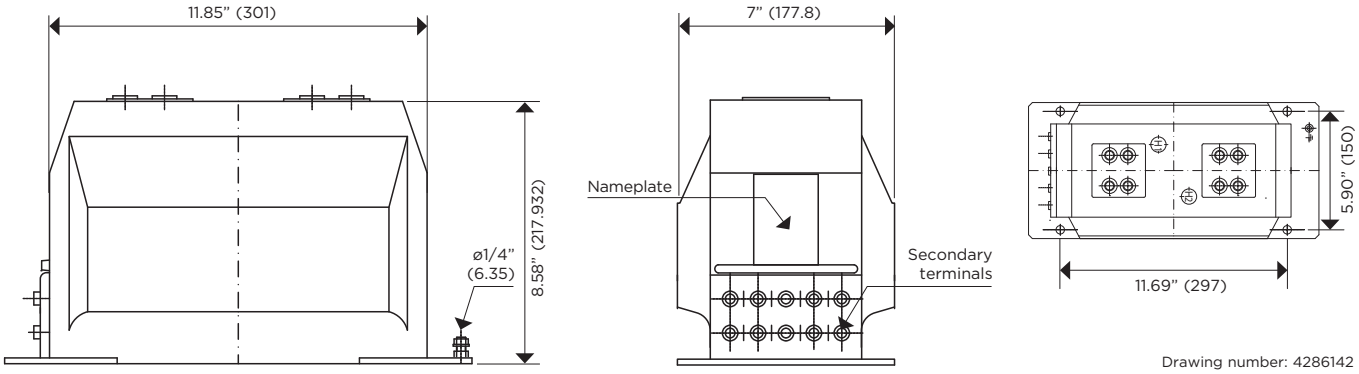

Drawing number: 4286142

MARKING (Single Primary Ratio)	ONE SECONDARY
	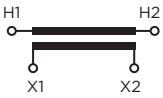

Approximate dimensions in inches (mm).
* Brown color available upon request

ACH-17

15 kV CURRENT TRANSFORMER

Electrical characteristics

Code	Current Ratio (Primary: Secondary) (A)	Continuous Thermal Current Rating Factor @ 30°C	Short-time Thermal Current (kA/1s)	Short-time Mechanical Current (kA_{peak})	IEEE Metering Accuracy	Relay Accuracy	Nominal Voltage System (kV)	BIL (kV)	Power-Frequency Withstand Voltage (1 min)	
									Primary & Secondary (kV_{rms})	Secondary Winding (kV_{rms})
750561010	50:5	1.2	5	10	0.3 B-0.5	C-50	15	110	34	2.5
750561015	75:5	1.2	7.5	15	0.3 B-0.5	C-50	15	110	34	2.5
750561020	100:5	1.2	10	20	0.3 B-0.5	C-50	15	110	34	2.5
750561030	150:5	1.2	15	30	0.3 B-1.0	C-50	15	110	34	2.5
750561040	200:5	1.2	20	40	0.3 B-1.0	C-50	15	110	34	2.5
750561060	300:5	1.2	30	60	0.3 B-1.0	C-50	15	110	34	2.5
750561080	400:5	1.2	40	80	0.3 B-1.8	C-100	15	110	34	2.5
750561120	600:5	1.2	50	95	0.3 B-1.8	C-100	15	110	34	2.5
750561160	800:5	1.2	60	120	0.3 B-1.8	C-100	15	110	34	2.5
750561200	1000:5	1.2	75	135	0.3 B-1.8	C-200	15	110	34	2.5
750561240	1200:5	1.2	84	150	0.3 B-1.8	C-200	15	110	34	2.5

Additional ratings available upon request.

Notes:

ACI-17

15 kV CURRENT TRANSFORMER

UL Recognized Component

INDOOR
60 Hertz

ARTECHE AC/CID Series are dry type indoor service current transformers. The core is encapsulated with Type B epoxy resin which provides excellent internal dielectric properties and mechanical strength, ensuring a long mechanical and electrical life. The transformer is maintenance free.

The core is built with high permeability grain oriented silicon steel laminations for low losses. The windings are copper wire with copper plate double isolation. The concentric distribution of the coils prevents magnetic flux leakage, achieving greater accuracy and higher capacity to withstand mechanical stresses in adverse operating conditions.

Partial Discharge measurements exceed the IEEE, CAN/CSA and IEC requirements.

Mechanical characteristics		
Insulation Material	Colors	Weight (lbs.)
Resin	Gray*	46.2

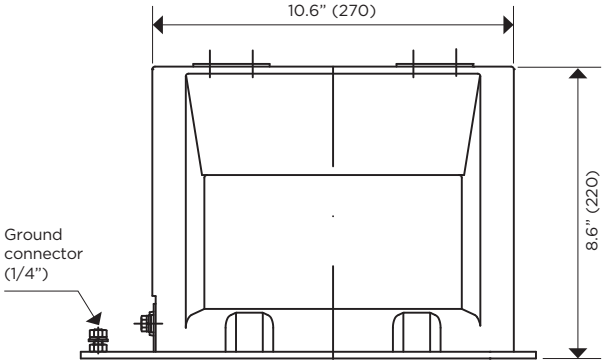

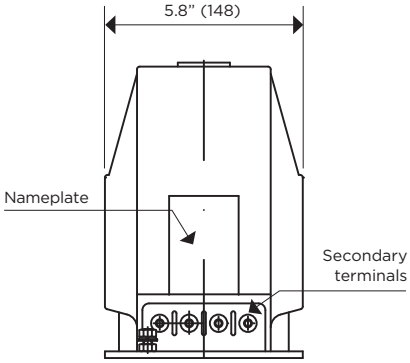

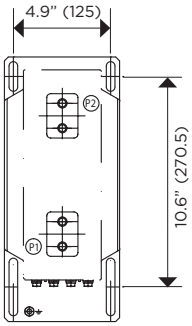

Drawing number: 4286141

	ONE SECONDARY
MARKING (Single Primary Ratio)	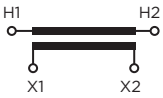

Approximate dimensions in inches (mm).
* Brown color available upon request

ACI-17

15 kV CURRENT TRANSFORMER

Electrical characteristics

Code	Current Ratio (Primary: Secondary) (A)	Continuous Thermal Current Rating Factor @ 30°C	Short-time Thermal Current (kA/1s)	Short-time Mechanical Current (kA_{peak})	IEEE Metering Accuracy	Relay Accuracy	Nominal Voltage System (kV)	BIL (kV)	Power-Frequency Withstand Voltage (1 min)	
									Primary & Secondary (kV_{rms})	Secondary Winding (kV_{rms})
750511010	50:5	1.2	5	10	0.3 B-0.5	C-50	15	110	34	2.5
750511015	75:5	1.2	7.5	15	0.3 B-0.5	C-50	15	110	34	2.5
750511020	100:5	1.2	10	20	0.3 B-0.5	C-50	15	110	34	2.5
750511030	150:5	1.2	15	30	0.3 B-0.5	C-50	15	110	34	2.5
750511040	200:5	1.2	20	40	0.3 B-0.5	C-50	15	110	34	2.5
750511060	300:5	1.2	30	60	0.3 B-0.5	C-50	15	110	34	2.5
750511080	400:5	1.2	40	80	0.3 B-0.5	C-50	15	110	34	2.5
750511120	600:5	1.2	50	95	0.3 B-0.9	C-50	15	110	34	2.5
750511160	800:5	1.2	60	120	0.3 B-0.9	C-50	15	110	34	2.5
750511200	1000:5	1.2	75	135	0.3 B-0.9	C-50	15	110	34	2.5
750511240	1200:5	1.2	84	150	0.3 B-0.9	C-100	15	110	34	2.5

Additional ratings available upon request.

Notes:

CID-17

15 kV CURRENT TRANSFORMER

INDOOR
60 Hertz

UL Recognized Component

ARTECHE AC/CID Series are dry type indoor service current transformers. The core is encapsulated with Type B epoxy resin which provides excellent internal dielectric properties and mechanical strength, ensuring a long mechanical and electrical life. The transformer is maintenance free.

The core is built with high permeability grain oriented silicon steel laminations for low losses. The windings are copper wire with copper plate double isolation. The concentric distribution of the coils prevents magnetic flux leakage, achieving greater accuracy and higher capacity to withstand mechanical stresses in adverse operating conditions.

Partial Discharge measurements exceed the IEEE, CAN/CSA and IEC requirements.

Mechanical characteristics		
Insulation Material	Colors	Weight (lbs.)
Resin	Gray*	55

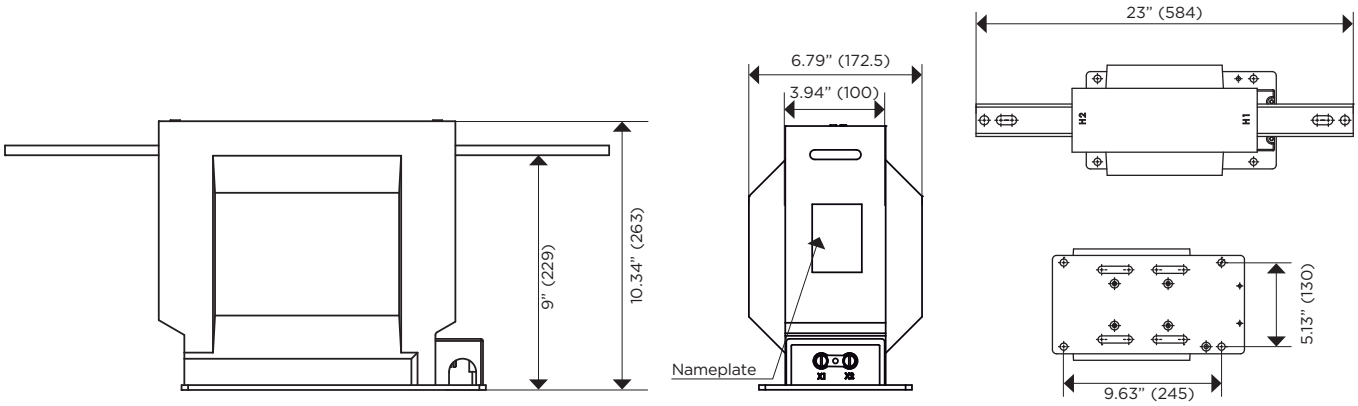

Drawing number: 4287278

	ONE SECONDARY
MARKING (Single Primary Ratio)	H1 H2 / X1 X2

Approximate dimensions in inches (mm).
* Brown color available upon request

CID-17

15 kV CURRENT TRANSFORMER

Electrical characteristics

Code	Current Ratio (Primary: Secondary) (A)	Continuous Thermal Current Rating Factor @ 30°C	Short-time Thermal Current (kA/1s)	Short-time Mechanical Current (kA_{peak})	IEEE Metering Accuracy	Relay Accuracy	Nominal Voltage System (kV)	BIL (kV)	Power-Frequency Withstand Voltage (1 min)	
									Primary & Secondary (kV_{rms})	Secondary Winding (kV_{rms})
750961001	5:5	1.5	0.5	1	0.3 B-1.8	C-200	15	110	34	2.5
750961002	10:5	1.5	1	2	0.3 B-1.8	C-200	15	110	34	2.5
750961003	15:5	1.5	1.5	3	0.3 B-1.8	C-200	15	110	34	2.5
750961004	20:5	1.5	2	4	0.3 B-1.8	C-200	15	110	34	2.5
750961005	25:5	1.5	2.5	5	0.3 B-1.8	C-200	15	110	34	2.5
750961006	30:5	1.5	3	6	0.3 B-1.8	C-200	15	110	34	2.5
750961008	40:5	1.5	4	8	0.3 B-1.8	C-200	15	110	34	2.5
750961010	50:5	1.5	5	10	0.3 B-1.8	C-200	15	110	34	2.5
750961015	75:5	1.5	7.5	15	0.3 B-1.8	C-200	15	110	34	2.5
750961020	100:5	1.5	10	20	0.3 B-1.8	C-200	15	110	34	2.5
750961030	150:5	1.5	15	30	0.3 B-1.8	C-200	15	110	34	2.5
750961040	200:5	1.5	20	40	0.3 B-1.8	C-200	15	110	34	2.5
750961060	300:5	1.5	30	60	0.3 B-1.8	C-200	15	110	34	2.5
750961080	400:5	1.5	40	80	0.3 B-1.8	C-200	15	110	34	2.5
750961120	600:5	1.5	50	95	0.3 B-1.8	C-200	15	110	34	2.5
750961160	800:5	1.5	60	120	0.3 B-1.8	C-200	15	110	34	2.5
750961200	1000:5	1.5	75	135	0.3 B-1.8	C-200	15	110	34	2.5
750961240	1200:5	1.2	84	150	0.3 B-1.8	C-200	15	110	34	2.5
750969001	5:5	1.5	0.5	1	0.15 B0.5	-	15	110	34	2.5
750969002	10:5	1.5	1	2	0.15 B0.5	-	15	110	34	2.5
750969003	15:5	1.5	1.5	3	0.15 B0.5	-	15	110	34	2.5
750969004	20:5	1.5	2	4	0.15 B0.5	-	15	110	34	2.5
750969005	25:5	1.5	2.5	5	0.15 B0.5	-	15	110	34	2.5
750969006	30:5	1.5	3	6	0.15 B0.5	-	15	110	34	2.5
750969008	40:5	1.5	4	8	0.15 B0.5	-	15	110	34	2.5
750969010	50:5	1.5	5	10	0.15 B0.5	-	15	110	34	2.5
750969015	75:5	1.5	7.5	15	0.15 B0.5	-	15	110	34	2.5
750969020	100:5	1.5	10	20	0.15 B0.5	-	15	110	34	2.5
750969030	150:5	1.5	15	30	0.15 B0.5	-	15	110	34	2.5
750969040	200:5	1.5	20	40	0.15 B0.5	-	15	110	34	2.5
750969060	300:5	1.5	30	60	0.15 B0.5	-	15	110	34	2.5
750969080	400:5	1.5	40	80	0.15 B0.5	-	15	110	34	2.5
750969120	600:5	1.5	50	95	0.15 B0.5	-	15	110	34	2.5
750969160	800:5	1.5	60	120	0.15 B0.5	-	15	110	34	2.5
750969200	1000:5	1.5	75	135	0.15 B0.5	-	15	110	34	2.5
750969240	1200:5	1.2	84	150	0.15 B0.5	-	15	110	34	2.5

Additional ratings available upon request.

CID-17

15 kV CURRENT TRANSFORMER

Electrical characteristics

Code	Current Ratio (Primary: Secondary) (A)	Continuous Thermal Current Rating Factor @ 30°C	Short-time Thermal Current (kA/1s)	Short-time Mechanical Current (kA_{peak})	IEEE Metering Accuracy	Relay Accuracy	Nominal Voltage System (kV)	BIL (kV)	Power-Frequency Withstand Voltage (1 min)	
									Primary & Secondary (kV_{rms})	Secondary Winding (kV_{rms})
High Accuracy Extended Range 5% nominal current to Rating Factor										
750967001	5:5	1.5	0.5	1	0.15S B0.5	-	15	110	34	2.5
750967002	10:5	1.5	1	2	0.15S B0.5	-	15	110	34	2.5
750967003	15:5	1.5	1.5	3	0.15S B0.5	-	15	110	34	2.5
750967004	20:5	1.5	2	4	0.15S B0.5	-	15	110	34	2.5
750967005	25:5	1.5	2.5	5	0.15S B0.5	-	15	110	34	2.5
750967006	30:5	1.5	3	6	0.15S B0.5	-	15	110	34	2.5
750967008	40:5	1.5	4	8	0.15S B0.5	-	15	110	34	2.5
750967010	50:5	1.5	5	10	0.15S B0.5	-	15	110	34	2.5
750967015	75:5	1.5	7.5	15	0.15S B0.5	-	15	110	34	2.5
750967020	100:5	1.5	10	20	0.15S B0.5	-	15	110	34	2.5
750967030	150:5	1.5	15	30	0.15S B0.5	-	15	110	34	2.5
750967040	200:5	1.5	20	40	0.15S B0.5	-	15	110	34	2.5
750967060	300:5	1.5	30	60	0.15S B0.5	-	15	110	34	2.5
750967080	400:5	1.5	40	80	0.15S B0.5	-	15	110	34	2.5
750967120	600:5	1.5	50	95	0.15S B0.5	-	15	110	34	2.5
750967160	800:5	1.5	60	120	0.15S B0.5	-	15	110	34	2.5
750967200	1000:5	1.5	75	135	0.15S B0.5	-	15	110	34	2.5
750967240	1200:5	1.2	84	150	0.15S B0.5	-	15	110	34	2.5
High Accuracy Extended Range 1% nominal current to Rating Factor										
750968040	200:5	2.0	20	40	0.15 B-1.8	-	15	110	34	2.5
750968120	600:5	2.0	50	95	0.15 B-1.8	-	15	110	34	2.5
750968200	1000:5	1.5	75	135	0.15 B-1.8	-	15	110	34	2.5
750968240	1200:5	1.2	84	150	0.15 B-1.8	-	15	110	34	2.5

Additional ratings available upon request.

CID-17

15 kV CURRENT TRANSFORMER

Notes:

ACD-24

25 kV CURRENT TRANSFORMER

UL Recognized Component

INDOOR
60 Hertz

ARTECHE AC/CID Series are dry type indoor service current transformers. The core is encapsulated with Type B epoxy resin which provides excellent internal dielectric properties and mechanical strength, ensuring a long mechanical and electrical life. The transformer is maintenance free.

The core is built with high permeability grain oriented silicon steel laminations for low losses. The windings are copper wire with copper plate double isolation. The concentric distribution of the coils prevents magnetic flux leakage, achieving greater accuracy and higher capacity to withstand mechanical stresses in adverse operating conditions.

Partial Discharge measurements exceed the IEEE, CAN/CSA and IEC requirements.

Mechanical characteristics		
Insulation Material	Colors	Weight (lbs.)
Resin	Gray*	35.3

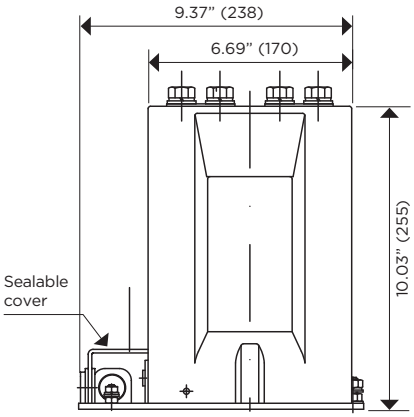

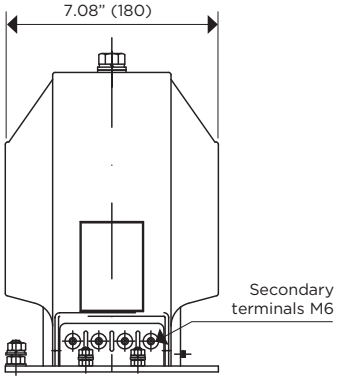

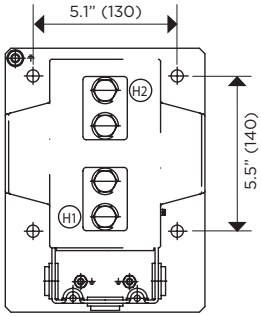

Drawing number: 4286140

	ONE SECONDARY
MARKING (Single Primary Ratio)	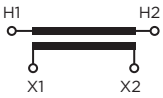

Approximate dimensions in inches (mm).
* Brown color available upon request

ACD-24

25 kV CURRENT TRANSFORMER

Electrical characteristics

Code	Current Ratio (Primary: Secondary) (A)	Continuous Thermal Current Rating Factor @ 30°C	Short-time Thermal Current (kA/1s)	Short-time Mechanical Current (kA_{peak})	IEEE Metering Accuracy	Relay Accuracy	Nominal Voltage System (kV)	BIL (kV)	Power-Frequency Withstand Voltage (1 min)	
									Primary & Secondary (kV_{rms})	Secondary Winding (kV_{rms})
750681001	5:5	1.2	0.5	1	0.3 B-0.5	C-50	25	150	50	2.5
750681002	10:5	1.2	1	2	0.3 B-0.5	C-50	25	150	50	2.5
750681003	15:5	1.2	1.5	3	0.3 B-0.5	C-50	25	150	50	2.5
750681004	20:5	1.2	2	4	0.3 B-0.5	C-50	25	150	50	2.5
750681005	25:5	1.2	2.5	5	0.3 B-0.5	C-50	25	150	50	2.5
750681006	30:5	1.2	3	6	0.3 B-0.5	C-50	25	150	50	2.5
750681008	40:5	1.2	4	8	0.3 B-0.5	C-50	25	150	50	2.5
750681010	50:5	1.2	5	10	0.3 B-0.5	C-50	25	150	50	2.5
750681015	75:5	1.2	7.5	15	0.3 B-0.5	C-50	25	150	50	2.5
750681020	100:5	1.2	10	20	0.3 B-0.5	C-50	25	150	50	2.5
750681030	150:5	1.2	15	30	0.3 B-0.5	C-50	25	150	50	2.5
750681040	200:5	1.2	20	40	0.3 B-0.5	C-50	25	150	50	2.5
750681060	300:5	1.2	30	60	0.3 B-0.5	C-50	25	150	50	2.5
750681080	400:5	1.2	40	80	0.3 B-0.5	C-50	25	150	50	2.5
750681120	600:5	1.2	50	95	0.3 B-0.5	C-50	25	150	50	2.5
750681160	800:5	1.2	60	120	0.3 B-0.5	C-50	25	150	50	2.5
750681200	1000:5	1.2	75	135	0.3 B-0.5	C-50	25	150	50	2.5
750681240	1200:5	1.2	84	150	0.3 B-0.5	C-50	25	150	50	2.5

Additional ratings available upon request.

Notes:

ACH-24

25 kV CURRENT TRANSFORMER

INDOOR
60 Hertz

UL Recognized Component

ARTECHE AC/CID Series are dry type indoor service current transformers. The core is encapsulated with Type B epoxy resin which provides excellent internal dielectric properties and mechanical strength, ensuring a long mechanical and electrical life. The transformer is maintenance free.

The core is built with high permeability grain oriented silicon steel laminations for low losses. The windings are copper wire with copper plate double isolation. The concentric distribution of the coils prevents magnetic flux leakage, achieving greater accuracy and higher capacity to withstand mechanical stresses in adverse operating conditions.

Partial Discharge measurements exceed the IEEE, CAN/CSA and IEC requirements.

Mechanical characteristics		
Insulation Material	Colors	Weight (lbs.)
Resin	Gray*	63.8

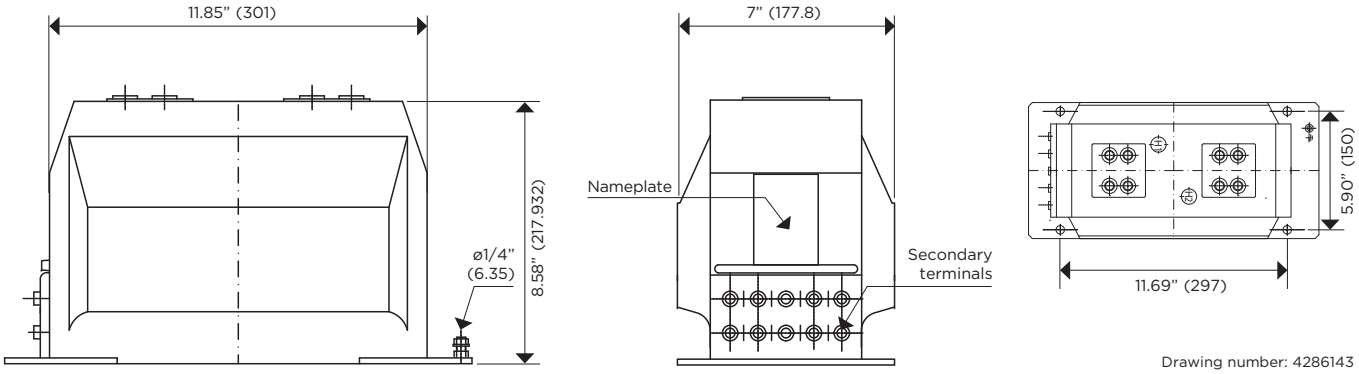

Drawing number: 4286143

MARKING (Single Primary Ratio)	ONE SECONDARY
	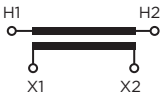

Approximate dimensions in inches (mm).
* Brown color available upon request

ACH-24

25 kV CURRENT TRANSFORMER

Electrical characteristics										
Code	Current Ratio (Primary: Secondary) (A)	Continuous Thermal Current Rating Factor @ 30°C	Short-time Thermal Current (kA/1s)	Short-time Mechanical Current (kA_{peak})	IEEE Metering Accuracy	Relay Accuracy	Nominal Voltage System (kV)	BIL (kV)	Power-Frequency Withstand Voltage (1 min)	
									Primary & Secondary (kV_{rms})	Secondary Winding (kV_{rms})
750741015	75:5	1.2	7.5	15	0.3 B-0.5	C-50	25	150	50	2.5
750741020	100:5	1.2	10	20	0.3 B-0.5	C-50	25	150	50	2.5
750741030	150:5	1.2	15	30	0.3 B-0.5	C-50	25	150	50	2.5
750741040	200:5	1.2	20	40	0.3 B-1.0	C-50	25	150	50	2.5
750741060	300:5	1.2	30	60	0.3 B-1.0	C-50	25	150	50	2.5
750741080	400:5	1.2	40	80	0.3 B-1.0	C-50	25	150	50	2.5
750741120	600:5	1.2	50	95	0.3 B-1.8	C-100	25	150	50	2.5
750741160	800:5	1.2	60	120	0.3 B-1.8	C-100	25	150	50	2.5
750741200	1000:5	1.2	75	135	0.3 B-1.8	C-200	25	150	50	2.5
750741240	1200:5	1.2	84	150	0.3 B-1.8	C-200	25	150	50	2.5
High Accuracy Extended Range 1% nominal current to Rating Factor										
750746040	200:5	2.0	20	40	0.15 B-1.8	-	25	150	50	2.5
750746120	600:5	1.2	75	135	0.15 B-1.8	-	25	150	50	2.5
750746200	1000:5	1.2	75	135	0.15 B-1.8	-	25	150	50	2.5
750746240	1200:5	1.2	75	135	0.15 B-1.8	-	25	150	50	2.5

Additional ratings available upon request.

Notes:

ACA-36

34.5 kV CURRENT TRANSFORMER

UL Recognized Component

INDOOR
60 Hertz

ARTECHE AC/CID Series are dry type indoor service current transformers. The core is encapsulated with Type B epoxy resin which provides excellent internal dielectric properties and mechanical strength, ensuring a long mechanical and electrical life. The transformer is maintenance free.

The core is built with high permeability grain oriented silicon steel laminations for low losses. The windings are copper wire with copper plate double isolation. The concentric distribution of the coils prevents magnetic flux leakage, achieving greater accuracy and higher capacity to withstand mechanical stresses in adverse operating conditions.

Partial Discharge measurements exceed the IEEE, CAN/CSA and IEC requirements.

Mechanical characteristics

Insulation Material	Colors	Weight (lbs.)
Resin	Gray*	35.3

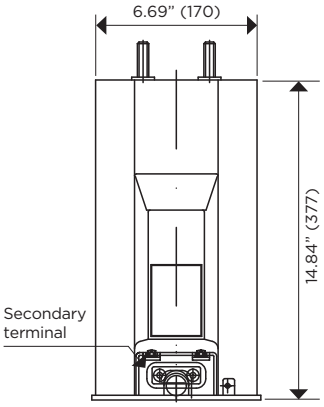

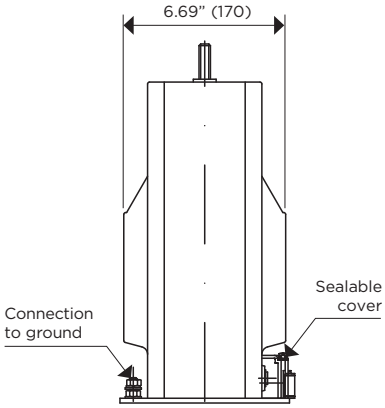

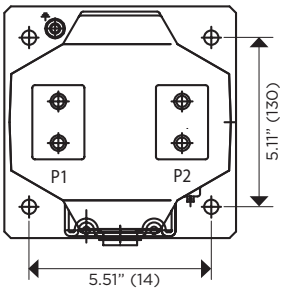

Drawing number: 4286144

	ONE SECONDARY
MARKING (Single Primary Ratio)	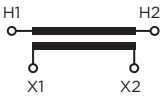

Approximate dimensions in inches (mm).
* Brown color available upon request

ACA-36

34.5 kV CURRENT TRANSFORMER

Electrical characteristics

Code	Current Ratio (Primary: Secondary) (A)	Continuous Thermal Current Rating Factor @ 30°C	Short-time Thermal Current (kA/1s)	Short-time Mechanical Current (kA_{peak})	IEEE Metering Accuracy	Relay Accuracy	Nominal Voltage System (kV)	BIL (kV)	Power-Frequency Withstand Voltage (1 min)	
									Primary & Secondary (kV_{rms})	Secondary Winding (kV_{rms})
751111001	5:5	1.2	0.5	1	0.3 B-0.5	C-50	34.5	200	70	2.5
751111002	10:5	1.2	1	2	0.3 B-0.5	C-50	34.5	200	70	2.5
751111003	15:5	1.2	1.5	3	0.3 B-0.5	C-50	34.5	200	70	2.5
751111004	20:5	1.2	2	4	0.3 B-0.5	C-50	34.5	200	70	2.5
751111005	25:5	1.2	2.5	5	0.3 B-0.5	C-50	34.5	200	70	2.5
751111006	30:5	1.2	3	6	0.3 B-0.5	C-50	34.5	200	70	2.5
751111008	40:5	1.2	4	8	0.3 B-0.5	C-50	34.5	200	70	2.5
751111010	50:5	1.2	5	10	0.3 B-0.5	C-50	34.5	200	70	2.5
751111015	75:5	1.2	7.5	15	0.3 B-0.5	C-50	34.5	200	70	2.5
751111020	100:5	1.2	10	20	0.3 B-0.5	C-50	34.5	200	70	2.5
751111030	150:5	1.2	15	30	0.3 B-0.5	C-50	34.5	200	70	2.5
751111040	200:5	1.2	20	40	0.3 B-0.5	C-50	34.5	200	70	2.5
751111060	300:5	1.2	30	60	0.3 B-0.5	C-50	34.5	200	70	2.5
751111080	400:5	1.2	40	80	0.3 B-0.5	C-50	34.5	200	70	2.5
751111120	600:5	1.2	50	95	0.3 B-0.5	C-50	34.5	200	70	2.5
751111160	800:5	1.2	60	120	0.3 B-0.5	C-50	34.5	200	70	2.5
751111200	1000:5	1.2	75	135	0.3 B-0.5	C-50	34.5	200	70	2.5
751111240	1200:5	1.2	84	150	0.3 B-0.5	C-50	34.5	200	70	2.5

Additional ratings available upon request.

Notes:

ACF-36

34.5 kV CURRENT TRANSFORMER

UL Recognized Component

INDOOR
60 Hertz

ARTECHE AC/CID Series are dry type indoor service current transformers. The core is encapsulated with Type B epoxy resin which provides excellent internal dielectric properties and mechanical strength, ensuring a long mechanical and electrical life. The transformer is maintenance free.

The core is built with high permeability grain oriented silicon steel laminations for low losses. The windings are copper wire with copper plate double isolation. The concentric distribution of the coils prevents magnetic flux leakage, achieving greater accuracy and higher capacity to withstand mechanical stresses in adverse operating conditions.

Partial Discharge measurements exceed the IEEE, CAN/CSA and IEC requirements.

Mechanical characteristics		
Insulation Material	Colors	Weight (lbs.)
Resin	Gray*	79.4

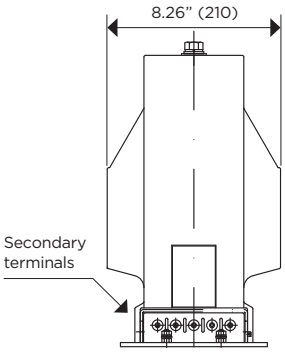

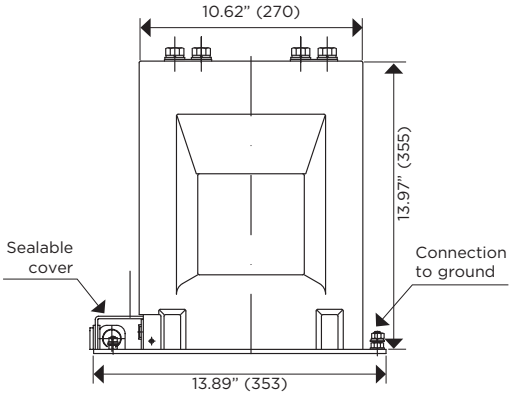

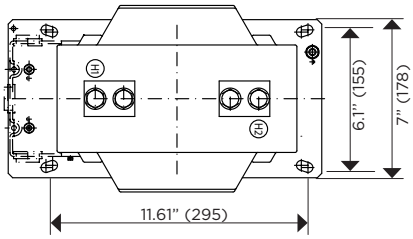

Drawing number: 4286145

	ONE SECONDARY
MARKING (Single Primary Ratio)	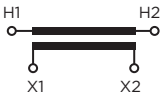

Approximate dimensions in inches (mm).
* Brown color available upon request

ACF-36

34.5 kV CURRENT TRANSFORMER

Electrical characteristics

Code	Current Ratio (Primary: Secondary) (A)	Continuous Thermal Current Rating Factor @ 30°C	Short-time Thermal Current (kA/1s)	Short-time Mechanical Current (kA_{peak})	IEEE Metering Accuracy	Relay Accuracy	Nominal Voltage System (kV)	BIL (kV)	Power-Frequency Withstand Voltage (1 min)	
									Primary & Secondary (kV_{rms})	Secondary Winding (kV_{rms})
751161001	5:5	1.2	0.5	1	0.3 B-1.8	C-100	34.5	200	70	2.5
751161002	10:5	1.2	1	2	0.3 B-1.8	C-100	34.5	200	70	2.5
751161003	15:5	1.2	1.5	3	0.3 B-1.8	C-100	34.5	200	70	2.5
751161004	20:5	1.2	2	4	0.3 B-1.8	C-100	34.5	200	70	2.5
751161005	25:5	1.2	2.5	5	0.3 B-1.8	C-100	34.5	200	70	2.5
751161006	30:5	1.2	3	6	0.3 B-1.8	C-100	34.5	200	70	2.5
751161008	40:5	1.2	4	8	0.3 B-1.8	C-100	34.5	200	70	2.5
751161010	50:5	1.2	5	10	0.3 B-1.8	C-100	34.5	200	70	2.5
751161015	75:5	1.2	7.5	15	0.3 B-1.8	C-100	34.5	200	70	2.5
751161020	100:5	1.2	10	20	0.3 B-1.8	C-100	34.5	200	70	2.5
751161030	150:5	1.2	15	30	0.3 B-1.8	C-100	34.5	200	70	2.5
751161040	200:5	1.2	20	40	0.3 B-1.8	C-100	34.5	200	70	2.5
751161060	300:5	1.2	30	60	0.3 B-1.8	C-100	34.5	200	70	2.5
751161080	400:5	1.2	40	80	0.3 B-1.8	C-100	34.5	200	70	2.5
751161120	600:5	1.2	50	95	0.3 B-1.8	C-100	34.5	200	70	2.5
751161160	800:5	1.2	60	120	0.3 B-1.8	C-100	34.5	200	70	2.5
751161200	1000:5	1.2	75	135	0.3 B-1.8	C-100	34.5	200	70	2.5
751161240	1200:5	1.2	84	150	0.3 B-1.8	C-200	34.5	200	70	2.5

Additional ratings available upon request.

Notes:

KCB-17

15 kV COMBINED TRANSFORMER

KCB 200 A KCB 600 A

INDOOR
60 Hertz

ARTECHE KCB series are dry type indoor service dead-front combination CT-PT

The core is encapsulated with Type B epoxy resin which provides excellent internal dielectric properties and mechanical strength, ensuring a long mechanical and electrical life. The transformer is maintenance free.

The entire surface of the transformer is coated with a conductive layer that is intended to be solidly grounded when energized. This allows for compact mounting inside switchgear or enclosures.

The core is built with high permeability grain oriented silicon steel laminations for low losses. The windings are copper wire with copper plate double isolation. The concentric distribution of the coils prevents magnetic flux leakage, achieving greater accuracy and higher capacity to withstand mechanical stresses in adverse operating conditions.

Partial Discharge measurements exceed the IEEE, CAN/CSA and IEC requirements.

The primary terminals are standard 200 or 600 Ampere rated dead-front bushing well and can be connected using IEEE 368 standard inserts and elbow connectors.

The secondary terminals are 1/4" slotted screws with flat and lock washers located inside a metallic terminal cover with two 1" NPT conduit hubs. The ground terminal is provided inside the terminal cover along with a manually operated CT secondary shorting device for safety purposes.

Mechanical characteristics		
Insulation Material	Colors	Weight (lbs.)
Metallized resin	Gray	150

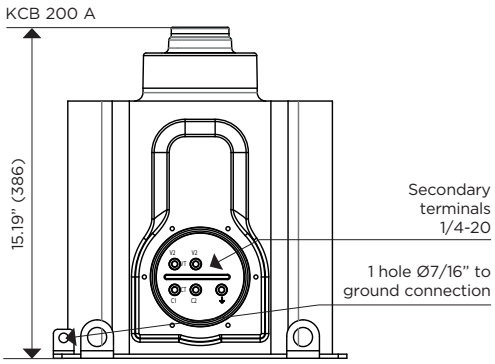

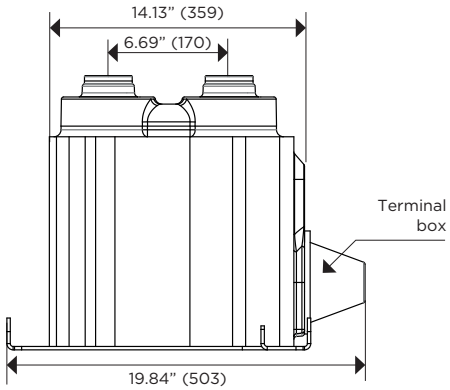

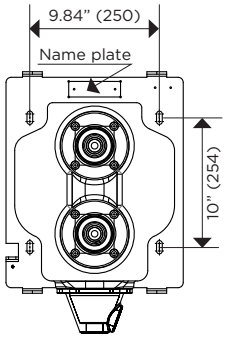

Drawing number: 4286592 (200 A) / 4287655 (600 A)

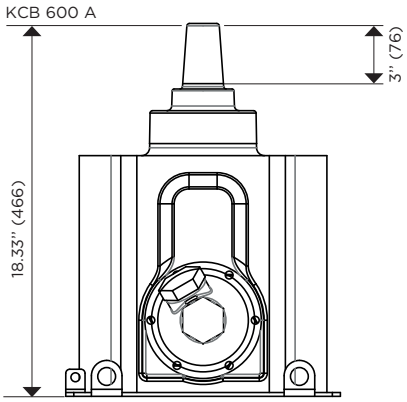

MARKING (Single Primary Ratio)	ONE SECONDARY

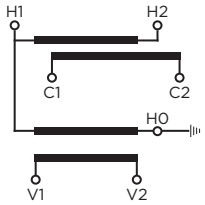

Approximate dimensions in inches (mm).

KCB-17

15 kV COMBINED TRANSFORMER

Electrical characteristics

Code	Current Ratio (Primary: Secondary)	Continuous Thermal Current Rating Factor @ 30°C	Short-time Thermal Current (kA/1s)	Short-time Mechanical Current (kA_{peak})	IEEE Metering Accuracy [Current Transformer]	IEEE Metering Accuracy [Voltage Transformer]	Nominal Voltage System (kV)	BIL (kV)	Power-Frequency Withstand Voltage (1 min)	
									Power frequency applied voltage test (kV_{rms})	Power frequency secondary applied voltage test (kV_{rms})
770034011	5:5	2.0	0.5	1.25	0.3 B-0.5	0.3 W,X,M,Y/1.2Z	15	110	34	2.5
770034021	10:5	2.0	1	2.5	0.3 B-0.5	0.3 W,X,M,Y/1.2Z	15	110	34	2.5
770034031	15:5	2.0	1.5	3.75	0.3 B-0.5	0.3 W,X,M,Y/1.2Z	15	110	34	2.5
770034041	20:5	2.0	2	5	0.3 B-0.5	0.3 W,X,M,Y/1.2Z	15	110	34	2.5
770034051	25:5	2.0	2.5	6.25	0.3 B-0.5	0.3 W,X,M,Y/1.2Z	15	110	34	2.5
770034061	30:5	2.0	3	7.5	0.3 B-0.5	0.3 W,X,M,Y/1.2Z	15	110	34	2.5
770034081	40:5	2.0	4	10	0.3 B-0.5	0.3 W,X,M,Y/1.2Z	15	110	34	2.5
770034101	50:5	2.0	5	12.5	0.3 B-0.5	0.3 W,X,M,Y/1.2Z	15	110	34	2.5
770034151	75:5	2.0	7.5	18.75	0.3 B-0.5	0.3 W,X,M,Y/1.2Z	15	110	34	2.5
770034201	100:5	2.0	10	25	0.3 B-0.5	0.3 W,X,M,Y/1.2Z	15	110	34	2.5
770035301	150:5	1.33	10	25	0.3 B-0.5	0.3 W,X,M,Y/1.2Z	15	110	34	2.5
770035401	200:5	1.0	10	25	0.3 B-0.5	0.3 W,X,M,Y/1.2Z	15	110	34	2.5
770031131	300:5	1.5	30	75	0.3 B-0.5	0.3 W,X,M,Y/1.2Z	15	110	34	2.5
770031141	400:5	1.5	40	100	0.3 B-0.5	0.3 W,X,M,Y/1.2Z	15	110	34	2.5
770031151	600:5	1.0	60	150	0.3 B-0.5	0.3 W,X,M,Y/1.2Z	15	110	34	2.5
High Accuracy Extended Range 1% nominal current to Rating Factor										
770031101	100:5	2.0	10	25	0.15 B-0.5	0.3 W,X,M,Y/1.2Z	15	110	34	2.5
770031121	200:5	2.0	20	50	0.15 B-0.5	0.3 W,X,M,Y/1.2Z	15	110	34	2.5
770031151	600:5	1.0	48	120	0.15 B-0.5	0.3 W,X,M,Y/1.2Z	15	110	34	2.5

Voltage Ratings

VT Ratio	Primary (V)	Secondary (V)	Thermal Burden (VA)	Continuous Rated Voltage Factor (Un)	Rated Voltage Factor 30s (Un)
60:1	7200/12470GY	120	750	1.1	1.25

Additional VT ratios are available. Please contact Arteche for details.

Notes:

KCB-24

25 kV COMBINED TRANSFORMER

KCB 200 A KCB 600 A

INDOOR
60 Hertz

ARTECHE KCB series are dry type indoor service dead-front combination CT-PT

The core is encapsulated with Type B epoxy resin which provides excellent internal dielectric properties and mechanical strength, ensuring a long mechanical and electrical life. The transformer is maintenance free.

The entire surface of the transformer is coated with a conductive layer that is intended to be solidly grounded when energized. This allows for compact mounting inside switchgear or enclosures.

The core is built with high permeability grain oriented silicon steel laminations for low losses. The windings are copper wire with copper plate double isolation. The concentric distribution of the coils prevents magnetic flux leakage, achieving greater accuracy and higher capacity to withstand mechanical stresses in adverse operating conditions.

Partial Discharge measurements exceed the IEEE, CAN/CSA and IEC requirements.

The primary terminals are standard 200 or 600 Ampere rated dead-front bushing well and can be connected using IEEE 368 standard inserts and elbow connectors.

The secondary terminals are 1/4" slotted screws with flat and lock washers located inside a metallic terminal cover with two 1" NPT conduit hubs. The ground terminal is provided inside the terminal cover along with a manually operated CT secondary shorting device for safety purposes.

Mechanical characteristics		
Insulation Material	Colors	Weight (lbs.)
Metallized resin	Gray	150

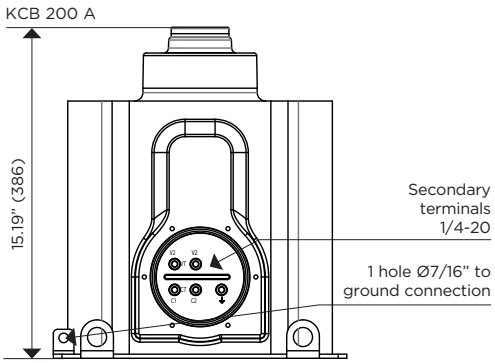

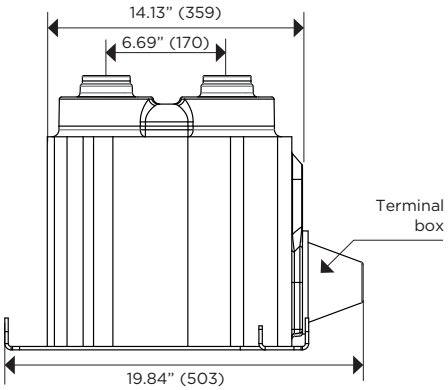

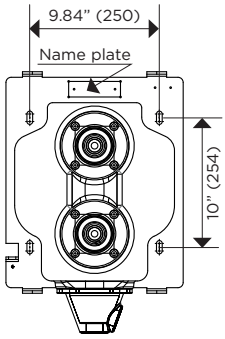

Drawing number: 9449854 (200 A) / 4287736 (600 A)

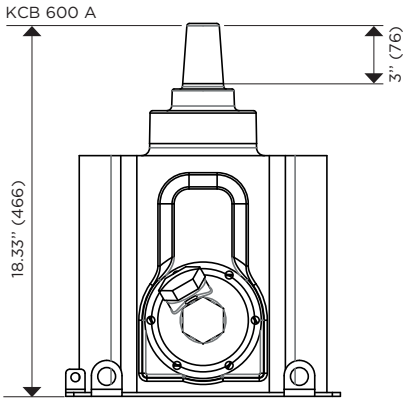

MARKING (Single Primary Ratio)	ONE SECONDARY

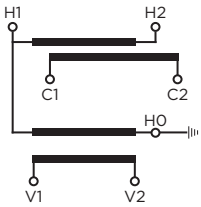

Approximate dimensions in inches (mm).

KCB-24

25 kV COMBINED TRANSFORMER

Electrical characteristics

Code	Current Ratio (Primary: Secondary)	Continuous Thermal Current Rating Factor @ 30°C	Short-time Thermal Current (kA/1s)	Short-time Mechanical Current (kA_{peak})	IEEE Metering Accuracy [Current Transformer]	IEEE Metering Accuracy [Voltage Transformer]	Nominal Voltage System (kV)	BIL (kV)	Power-Frequency Withstand Voltage (1 min)	
									Power frequency applied voltage test (kV_{rms})	Power frequency secondary applied voltage test (kV_{rms})
770104016	5:5	2.0	0.5	1.25	0.3 B-0.5	0.3 W,X,M,Y/1.2Z	25	125	50	2.5
770104026	10:5	2.0	1	2.5	0.3 B-0.5	0.3 W,X,M,Y/1.2Z	25	125	50	2.5
770104036	15:5	2.0	1.5	3.75	0.3 B-0.5	0.3 W,X,M,Y/1.2Z	25	125	50	2.5
770104046	20:5	2.0	2	5	0.3 B-0.5	0.3 W,X,M,Y/1.2Z	25	125	50	2.5
770104056	25:5	2.0	2.5	6.25	0.3 B-0.5	0.3 W,X,M,Y/1.2Z	25	125	50	2.5
770104066	30:5	2.0	3	7.5	0.3 B-0.5	0.3 W,X,M,Y/1.2Z	25	125	50	2.5
770104086	40:5	2.0	4	10	0.3 B-0.5	0.3 W,X,M,Y/1.2Z	25	125	50	2.5
770104106	50:5	2.0	5	12.5	0.3 B-0.5	0.3 W,X,M,Y/1.2Z	25	125	50	2.5
770104156	75:5	2.0	7.5	18.75	0.3 B-0.5	0.3 W,X,M,Y/1.2Z	25	125	50	2.5
770104206	100:5	2.0	10	25	0.3 B-0.5	0.3 W,X,M,Y/1.2Z	25	125	50	2.5
770105306	150:5	1.33	10	25	0.3 B-0.5	0.3 W,X,M,Y/1.2Z	25	125	50	2.5
770105406	200:5	1.0	10	25	0.3 B-0.5	0.3 W,X,M,Y/1.2Z	25	125	50	2.5
770101136	300:5	1.5	30	75	0.3 B-0.5	0.3 W,X,M,Y/1.2Z	25	125	50	2.5
770101146	400:5	1.5	40	100	0.3 B-0.5	0.3 W,X,M,Y/1.2Z	25	125	50	2.5
770101156	600:5	1.0	60	150	0.3 B-0.5	0.3 W,X,M,Y/1.2Z	25	125	50	2.5
High Accuracy Extended Range 1% nominal current to Rating Factor										
770101106	100:5	2.0	10	25	0.15 B-0.5	0.3 W,X,M,Y/1.2Z	25	125	50	2.5
770101126	200:5	2.0	20	50	0.15 B-0.5	0.3 W,X,M,Y/1.2Z	25	125	50	2.5
770101156	600:5	1.0	48	120	0.15 B-0.5	0.3 W,X,M,Y/1.2Z	25	125	50	2.5

Voltage Ratings

VT Ratio	Primary (V)	Secondary (V)	Thermal Burden (VA)	Continuous Rated Voltage Factor (Un)	Rated Voltage Factor 30s (Un)
120:1	14400/24940GY	120	750	1.1	1.25

Additional VT ratios are available. Please contact Arteche for details.

Notes:

.....

.....

.....

.....

.....

.....

.....

.....

.....

.....

.....

.....

arteche

5 kV – 69 kV OUTDOOR INSTRUMENT TRANSFORMERS & METERING UNITS

VRL-7

5 kV VOLTAGE TRANSFORMER

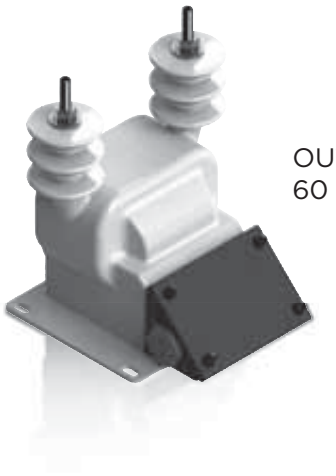

OUTDOOR
60 Hertz

ARTECHE UR/VR series are dry type outdoor service voltage transformers. The core is encapsulated with Type B epoxy resin which provides excellent internal dielectric properties and mechanical strength. The external layer of Cycloaliphatic Epoxy Resin (CEP) provides resistance to ultraviolet rays and the effects of tracking and erosion on the exterior of the transformer ensuring a long mechanical and electrical life. The transformer is maintenance free.

The external layer can be manufactured with Hydrophobic Cycloaliphatic Epoxy Resin (HCEP) which improves service life expectancy due to its improved tracking and erosion resistance. HCEP additionally increases the transformer's weatherability and offers better performance in heavily polluted environments.

The core is built with high permeability grain oriented silicon steel laminations for low losses. The windings are copper wire with copper plate double isolation. The concentric distribution of the coils prevents magnetic flux leakage, achieving greater accuracy and higher capacity to withstand mechanical stresses in adverse operating conditions.

Partial discharge measurements exceed IEEE C57.13 2008 requirements.

Mechanical characteristics

Insulation Material	Colors	Weight (lbs.)	Creepage distance (in)	Strike distance (in)
Resin	Gray *	40	15.8	3

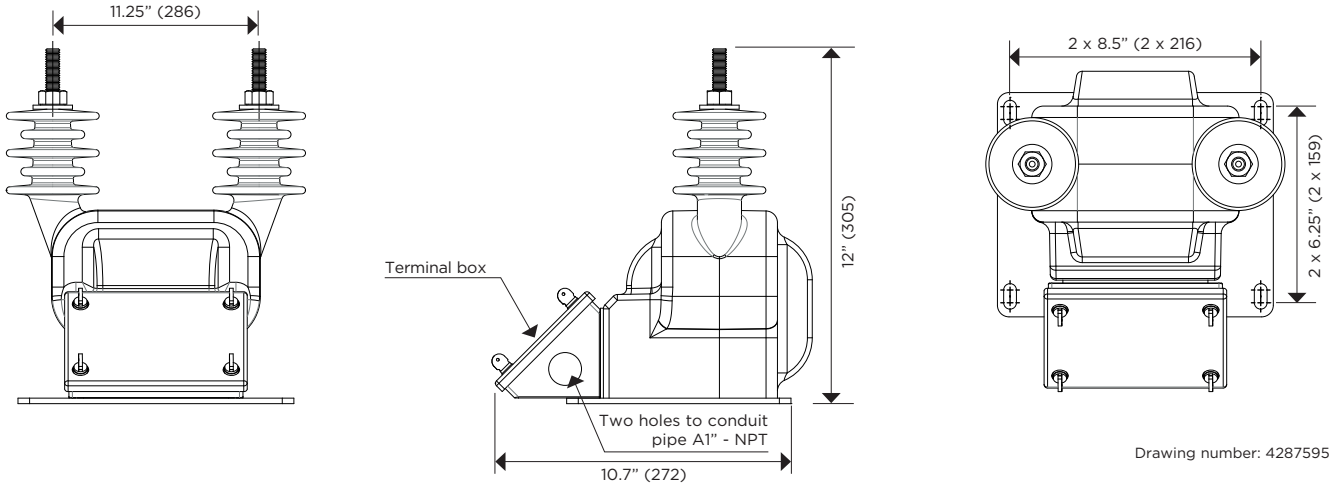

Drawing number: 4287595

CONNECTIONS

PRIMARY TERMINAL

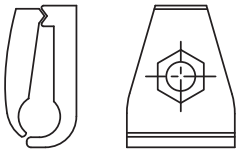

Type: TE-4T
Material: Copper
Range: 8SOL-4TRE

GROUND TERMINAL

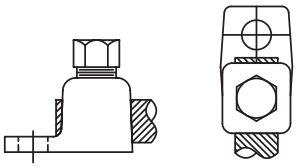

Type: TE-12-250
Material: Copper
Range: 4TRE-250MCM

SECONDARY TERMINAL

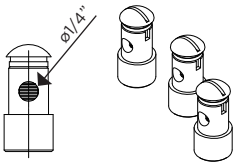

Type: Quick Connector
Material: Brass

MARKING (Single Primary Ratio)

SINGLE SECONDARY

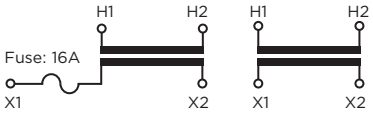

FUSED UNFUSED

Approximate dimensions in inches (mm). • * Brown color available upon request

VRL-7

5 kV VOLTAGE TRANSFORMER

Electrical characteristics											
Code * (CEP)	Ratio	Primary (V)	Secon-dary (V)	IEEE Metering Accuracy	Continuous Rated Voltage Factor (Un)	Rated Voltage Factor 30 s (Un)	Thermal Burden (VA)	Highest Nominal Voltage System (kV)	BIL (kV)	Power-Frequency Withstand Voltage (1 min)	
										Primary & Secondary (kV_{rms})	Secondary Winding (kV_{rms})
With FUSE in the secondary box											
757091020	20:1	2400/4160Y	120	0.3 W,X,M,Y	1.1	1.5	1000	5	60	19	2.5
757091035	35:1	4200/4200Y	120	0.3 W,X,M,Y	1.1	1.5	1000	5	60	19	2.5
757091040	40:1	4800/4800Y	120	0.3 W,X,M,Y	1.1	1.5	1000	5	60	19	2.5
Without FUSE in the secondary box											
757090020	20:1	2400/4160Y	120	0.3 W,X,M,Y	1.1	1.5	1000	5	60	19	2.5
757090035	35:1	4200/4200Y	120	0.3 W,X,M,Y	1.1	1.5	1000	5	60	19	2.5
757090040	40:1	4800/4800Y	120	0.3 W,X,M,Y	1.1	1.5	1000	5	60	19	2.5

*** For HCEP Option add (–H) to the end of the code number.**
Additional ratings available upon request.

Notes:

URJ-17

15 kV VOLTAGE TRANSFORMER

OUTDOOR
60 Hertz

ARTECHE UR/VR series are dry type outdoor service voltage transformers. The core is encapsulated with Type B epoxy resin which provides excellent internal dielectric properties and mechanical strength. The external layer of Cycloaliphatic Epoxy Resin (CEP) provides resistance to ultraviolet rays and the effects of tracking and erosion on the exterior of the transformer ensuring a long mechanical and electrical life. The transformer is maintenance free.

The external layer can be manufactured with Hydrophobic Cycloaliphatic Epoxy Resin (HCEP) which improves service life expectancy due to its improved tracking and erosion resistance. HCEP additionally increases the transformer's weatherability and offers better performance in heavily polluted environments.

The core is built with high permeability grain oriented silicon steel laminations for low losses. The windings are copper wire with copper plate double isolation. The concentric distribution of the coils prevents magnetic flux leakage, achieving greater accuracy and higher capacity to withstand mechanical stresses in adverse operating conditions.

Partial Discharge measurements exceed the IEEE, CAN/CSA and IEC requirements.

Mechanical characteristics

Insulation Material	Colors	Weight (lbs.)	Creepage distance (in)	Strike distance (in)
Resin	Gray*	94.6	21.45/25+	11.61/12.5+

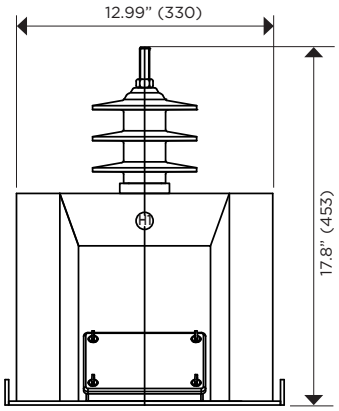

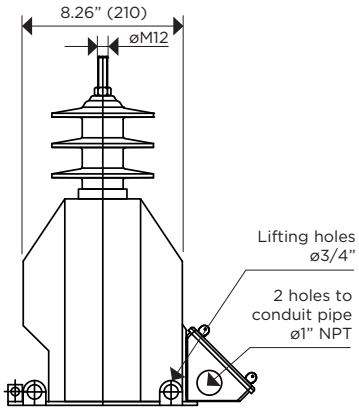

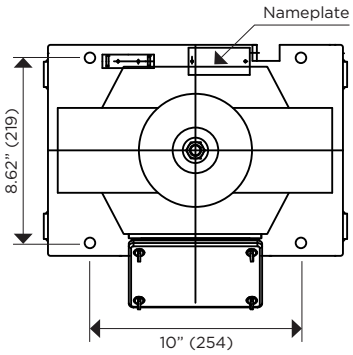

Drawing number:
Fused: 4286572 / 4286596+
Unfused: 4286820

CONNECTIONS

PRIMARY TERMINAL

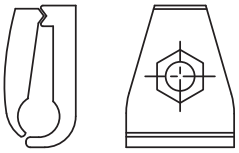

Type: TE-4T
Material: Copper
Range: 8SOL-4TRE

GROUND TERMINAL

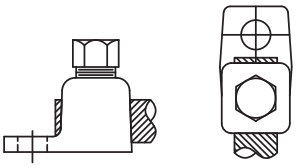

Type: TE-12-250
Material: Copper
Range: 4TRE-250MCM

SECONDARY TERMINAL

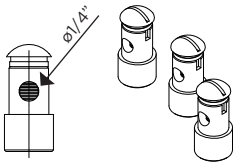

Type: Quick Connector
Material: Brass

MARKING (Single Primary Ratio)

SINGLE SECONDARY

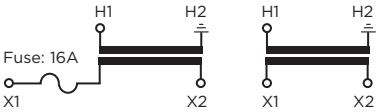

FUSED UNFUSED

ONE SECONDARY WITH TAP

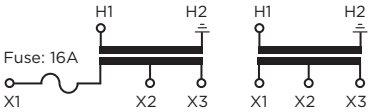

FUSED UNFUSED

Approximate dimensions in inches (mm). • * Brown color available upon request

URJ-17

15 kV VOLTAGE TRANSFORMER

Electrical characteristics											
Code * (CEP)	Ratio	Primary (V)	Secondary (V)	IEEE Metering Accuracy	Continuous Rated Voltage Factor (Un)	Rated Voltage Factor 30 s (Un)	Thermal Burden (VA)	Nominal Voltage System (kV)	BIL (kV)	Power-Frequency Withstand Voltage (1 min)	
										Primary & Secondary (kV_{rms})	Secondary Winding (kV_{rms})
With FUSE in the secondary box											
757061020	20:1	2400/4156GY	120	0.3 W,X,M,Y	1.1	1.5	750	5	60	19	2.5
757063060	20/60:1	2400/4156GY & 7200/12470GY	120	0.3 W,X / 0.3W,X,M,Y	1.1	1.5	750	15	110	34	2.5
757061060	60:1	7200/12470GY	120	0.3 W,X,M,Y	1.1	1.5	750	15	110	34	2.5
757061063	63.5:1	7620/13200GY	120	0.3 W,X,M,Y	1.1	1.5	750	15	110	34	2.5
757061070	70:1	8400/14550GY	120	0.3 W,X,M,Y	1.1	1.5	750	15	110	34	2.5
757065020	20:1	2400/4156GY	120	0.3 W,X,M,Y,Z	1.1	1.25	1500	5	60	19	2.5
757066060	20/60:1	2400/4156GY & 7200/12470GY	120	0.3 W,X / 0.3W,X,M,Y	1.1	1.25	1500	15	110	34	2.5
757065060	60:1	7200/12470GY	120	0.3 W,X,M,Y,Z	1.1	1.25	1500	15	110	34	2.5
757065063	63.5:1	7620/13200GY	120	0.3 W,X,M,Y	1.1	1.25	1500	15	110	34	2.5
757065070	70:1	8400/14550GY	120	0.3 W,X,M,Y,Z	1.1	1.25	1500	15	110	34	2.5
757067020+	20:1	2400/4156GY	120	0.3 W,X,M,Y,Z	1.1	1.25	1500	5	60	19	2.5
757068020+	20/60:1	2400/4156GY & 7200/12470GY	120	0.3 W,X / 0.3W,X,M,Y	1.1	1.25	1500	15	110	34	2.5
757067060+	60:1	7200/12470GY	120	0.3 W,X,M,Y,Z	1.1	1.25	1500	15	110	34	2.5
757067063+	63.5:1	7620/13200GY	120	0.3 W,X,M,Y	1.1	1.25	1500	15	110	34	2.5
757067070+	70:1	8400/14550GY	120	0.3 W,X,M,Y,Z	1.1	1.25	1500	15	110	34	2.5
Without FUSE in the secondary box											
757064020	20:1	2400/4156GY	120	0.3 W,X,M,Y	1.1	1.5	750	5	60	19	2.5
757064060	60:1	7200/12470GY	120	0.3 W,X,M,Y	1.1	1.5	750	15	110	34	2.5
757064063	63.5:1	7620/13200GY	120	0.3 W,X,M,Y	1.1	1.5	750	15	110	34	2.5
757064070	70:1	8400/14550GY	120	0.3 W,X,M,Y	1.1	1.5	750	15	110	34	2.5
757060020	20:1	2400/4156GY	120	0.3 W,X,M,Y,Z	1.1	1.25	1500	5	60	19	2.5
757060060	60:1	7200/12470GY	120	0.3 W,X,M,Y,Z	1.1	1.25	1500	15	110	34	2.5
757060063	63.5:1	7620/13200GY	120	0.3 W,X,M,Y	1.1	1.25	1500	15	110	34	2.5
757060070	70:1	8400/14550GY	120	0.3 W,X,M,Y,Z	1.1	1.25	1500	15	110	34	2.5

*** For HCEP Option add (–H) to the end of the code number.**
Additional ratings available upon request.
+ Extended creepage distance

Notes:

.....

.....

.....

.....

.....

.....

.....

.....

.....

URL-17

15 kV VOLTAGE TRANSFORMER

OUTDOOR
60 Hertz

ARTECHE UR/VR series are dry type outdoor service voltage transformers. The core is encapsulated with Type B epoxy resin which provides excellent internal dielectric properties and mechanical strength. The external layer of Cycloaliphatic Epoxy Resin (CEP) provides resistance to ultraviolet rays and the effects of tracking and erosion on the exterior of the transformer ensuring a long mechanical and electrical life. The transformer is maintenance free.

The external layer can be manufactured with Hydrophobic Cycloaliphatic Epoxy Resin (HCEP) which improves service life expectancy due to its improved tracking and erosion resistance. HCEP additionally increases the transformer's weatherability and offers better performance in heavily polluted environments.

The core is built with high permeability grain oriented silicon steel laminations for low losses. The windings are copper wire with copper plate double isolation. The concentric distribution of the coils prevents magnetic flux leakage, achieving greater accuracy and higher capacity to withstand mechanical stresses in adverse operating conditions.

Partial Discharge measurements exceed the IEEE, CAN/CSA and IEC requirements.

Mechanical characteristics

Insulation Material	Colors	Weight (lbs.)	Creepage distance (in)	Strike distance (in)
Resin	Gray*	80	21.65	12.2

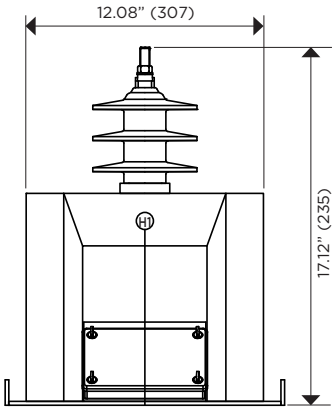

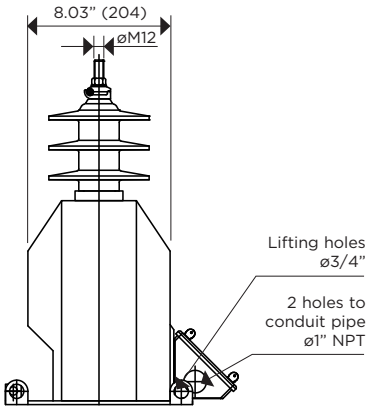

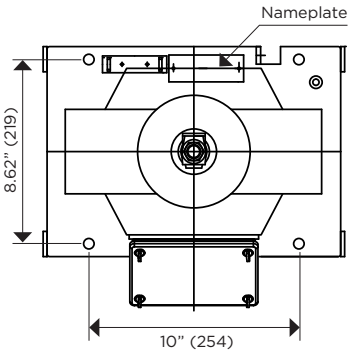

Drawing number:
Fused: 4286570
Unfused: 4286769

CONNECTIONS

PRIMARY TERMINAL

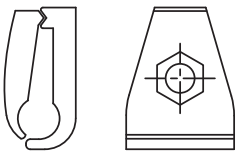

Type: TE-4T
Material: Copper
Range: 8SOL-4TRE

GROUND TERMINAL

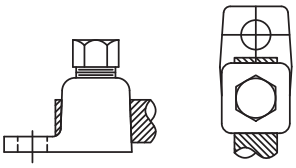

Type: TE-12-250
Material: Copper
Range: 4TRE-250MCM

SECONDARY TERMINAL

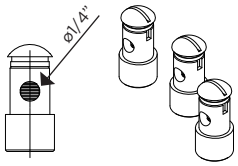

Type: Quick Connector
Material: Brass

MARKING (Single Primary Ratio)

SINGLE SECONDARY

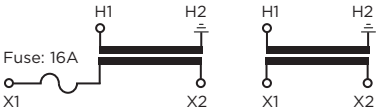

FUSED UNFUSED

Approximate dimensions in inches (mm). • * Brown color available upon request

URL-17

15 kV VOLTAGE TRANSFORMER

Electrical characteristics											
Code * (CEP)	Ratio	Primary (V)	Secondary (V)	IEEE Metering Accuracy	Continuous Rated Voltage Factor (Un)	Rated Voltage Factor 30 s (Un)	Thermal Burden (VA)	Nominal Voltage System (kV)	BIL (kV)	Power-Frequency Withstand Voltage (1 min)	
										Primary & Secondary (kV_{rms})	Secondary Winding (kV_{rms})
With FUSE in the secondary box											
757031020	20:1	2400/4160GY	120	0.3 W,X,M,Y	1.1	1.5	500	5	60	19	2.5
757031035	35:1	4200/7280GY	120	0.3 W,X,M,Y	1.1	1.5	500	5	60	19	2.5
757031040	40:1	4200/4200GY	120	0.3 W,X,M,Y	1.1	1.5	500	5	60	19	2.5
757031042	42:1	5040/8730GY	120	0.3 W,X,M,Y	1.1	1.5	500	8.7	75	26	2.5
757031060	60:1	7200/12470GY	120	0.3 W,X,M,Y	1.1	1.5	500	15	110	34	2.5
757031063	63.5:1	7620/13200GY	120	0.3 W,X,M,Y	1.1	1.5	500	15	110	34	2.5
757031066	66.4:1	7968/13800GY	120	0.3 W,X,M,Y	1.1	1.5	500	15	110	34	2.5
757031067	66.67:1	8000/13856GY	120	0.3 W,X,M,Y	1.1	1.5	500	15	110	34	2.5
757031070	70:1	8400/14550GY	120	0.3 W,X,M,Y	1.1	1.5	500	15	110	34	2.5
757035020	20:1	2400/4160GY	120	0.3 W,X,M,Y	1.1	1.25	750	5	60	19	2.5
757035035	35:1	4200/7280GY	120	0.3 W,X,M,Y	1.1	1.25	750	5	60	19	2.5
757035040	40:1	4200/4200GY	120	0.3 W,X,M,Y	1.1	1.25	750	5	60	19	2.5
757035042	42:1	5040/8730GY	120	0.3 W,X,M,Y	1.1	1.25	750	8.7	75	26	2.5
757035060	60:1	7200/12470GY	120	0.3 W,X,M,Y	1.1	1.25	750	15	110	34	2.5
757035063	63.5:1	7620/13200GY	120	0.3 W,X,M,Y	1.1	1.25	750	15	110	34	2.5
757035066	66.4:1	7968/13800GY	120	0.3 W,X,M,Y	1.1	1.25	750	15	110	34	2.5
757035067	66.67:1	8000/13856GY	120	0.3 W,X,M,Y	1.1	1.25	750	15	110	34	2.5
757035070	70:1	8400/14550GY	120	0.3 W,X,M,Y	1.1	1.25	750	15	110	34	2.5
Without FUSE in the secondary box											
757034020	20:1	2400/4160GY	120	0.3 W,X,M,Y	1.1	1.5	500	5	60	19	2.5
757034035	35:1	4200/7280GY	120	0.3 W,X,M,Y	1.1	1.5	500	5	60	19	2.5
757034040	40:1	4200/4200GY	120	0.3 W,X,M,Y	1.1	1.5	500	5	60	19	2.5
757034042	42:1	5040/8730GY	120	0.3 W,X,M,Y	1.1	1.5	500	8.7	75	26	2.5
757034060	60:1	7200/12470GY	120	0.3 W,X,M,Y	1.1	1.5	500	15	110	34	2.5
757034063	63.5:1	7620/13200GY	120	0.3 W,X,M,Y	1.1	1.5	500	15	110	34	2.5
757034066	66.4:1	7968/13800GY	120	0.3 W,X,M,Y	1.1	1.5	500	15	110	34	2.5
757034067	66.67:1	8000/13856GY	120	0.3 W,X,M,Y	1.1	1.5	500	15	110	34	2.5
757034070	70:1	8400/14550GY	120	0.3 W,X,M,Y	1.1	1.5	500	15	110	34	2.5
757030020	20:1	2400/4160GY	120	0.3 W,X,M,Y	1.1	1.25	750	5	60	19	2.5
757030035	35:1	4200/7280GY	120	0.3 W,X,M,Y	1.1	1.25	750	5	60	19	2.5
757030040	40:1	4200/4200GY	120	0.3 W,X,M,Y	1.1	1.25	750	5	60	19	2.5
757030042	42:1	5040/8730GY	120	0.3 W,X,M,Y	1.1	1.25	750	8.7	75	26	2.5
757030060	60:1	7200/12470GY	120	0.3 W,X,M,Y	1.1	1.25	750	15	110	34	2.5
757030063	63.5:1	7620/13200GY	120	0.3 W,X,M,Y	1.1	1.25	750	15	110	34	2.5
757030066	66.4:1	7968/13800GY	120	0.3 W,X,M,Y	1.1	1.25	750	15	110	34	2.5
757030067	66.67:1	8000/13856GY	120	0.3 W,X,M,Y	1.1	1.25	750	15	110	34	2.5
757030070	70:1	8400/14550GY	120	0.3 W,X,M,Y	1.1	1.25	750	15	110	34	2.5

*** For HCEP Option add (–H) to the end of the code number.**
Additional ratings available upon request.

URN-17

15 kV VOLTAGE TRANSFORMER

OUTDOOR
60 Hertz

ARTECHE UR/VR series are dry type outdoor service voltage transformers. The core is encapsulated with Type B epoxy resin which provides excellent internal dielectric properties and mechanical strength. The external layer of Cycloaliphatic Epoxy Resin (CEP) provides resistance to ultraviolet rays and the effects of tracking and erosion on the exterior of the transformer ensuring a long mechanical and electrical life. The transformer is maintenance free.

The external layer can be manufactured with Hydrophobic Cycloaliphatic Epoxy Resin (HCEP) which improves service life expectancy due to its improved tracking and erosion resistance. HCEP additionally increases the transformer's weatherability and offers better performance in heavily polluted environments.

The core is built with high permeability grain oriented silicon steel laminations for low losses. The windings are copper wire with copper plate double isolation. The concentric distribution of the coils prevents magnetic flux leakage, achieving greater accuracy and higher capacity to withstand mechanical stresses in adverse operating conditions.

Partial Discharge measurements exceed the IEEE, CAN/CSA and IEC requirements.

Mechanical characteristics

Insulation Material	Colors	Weight (lbs.)	Creepage distance (in)	Strike distance (in)
Resin	Gray*	132	21.6	13.9

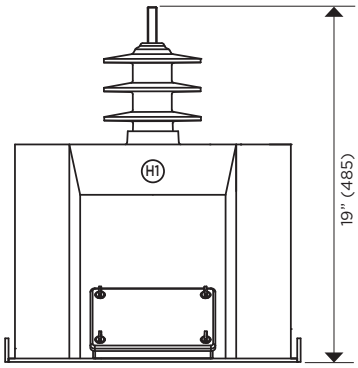

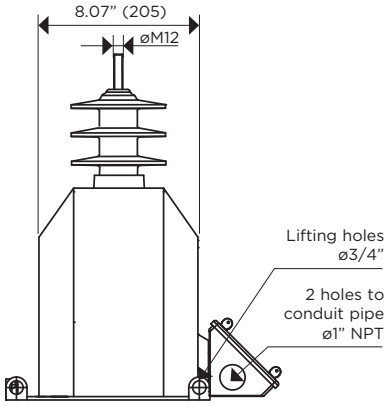

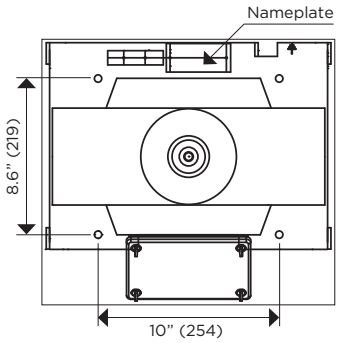

Drawing number:
Fused: 4286573
Unfused: 4286821

CONNECTIONS

PRIMARY TERMINAL

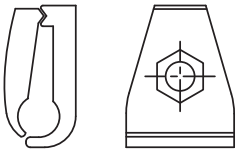

Type: TE-4T
Material: Copper
Range: 8SOL-4TRE

GROUND TERMINAL

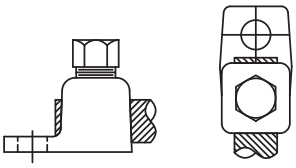

Type: TE-12-250
Material: Copper
Range: 4TRE-250MCM

SECONDARY TERMINAL

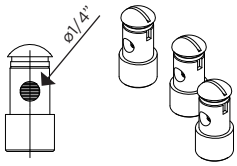

Type: Quick Connector
Material: Brass

MARKING (Single Primary Ratio)

SINGLE SECONDARY

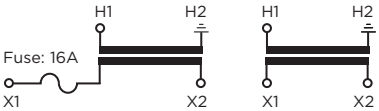

FUSED UNFUSED

ONE SECONDARY WITH TAP

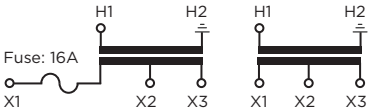

FUSED UNFUSED

Approximate dimensions in inches (mm). • * Brown color available upon request

URN-17

15 kV VOLTAGE TRANSFORMER

Electrical characteristics											
Code * (CEP)	Ratio	Primary (V)	Secondary (V)	IEEE Metering Accuracy	Continuous Rated Voltage Factor (Un)	Rated Voltage Factor 30 s (Un)	Thermal Burden (VA)	Nominal Voltage System (kV)	BIL (kV)	Power-Frequency Withstand Voltage (1 min)	
										Primary & Secondary (kV_{rms})	Secondary Winding (kV_{rms})
With FUSE in the secondary box											
757393060	20/60:1	2400/4156GY & 7200/12470GY	120	0.3 W,X/ 0.3 W,X,M,Y	1.1	1.5	1000	15	110	34	2.5
757393113	66.26/112.88:1	7620/13200GY	115/67.5	0.3 W,X,M,Y/ 0.6 W,X,M,Y	1.1	1.5	1000	15	110	34	2.5
757396060	20/60:1	2400/4156GY & 7200/12470GY	120	0.3 W,X/ 0.3 W,X,M,Y	1.1	1.25	1500	15	110	34	2.5
757396113	66.26/112.88:1	7620/13200GY	115/67.5	0.3 W,X,M,Y/ 0.6 W,X,M,Y	1.1	1.25	1500	15	110	34	2.5
Without FUSE in the secondary box											
757394060	20/60:1	2400/4156GY & 7200/12470GY	120	0.3 W,X/ 0.3 W,X,M,Y	1.1	1.5	1000	15	110	34	2.5
757394113	66.26/112.88:1	7620/13200GY	115/67.5	0.3 W,X,M,Y/ 0.6 W,X,M,Y	1.1	1.5	1000	15	110	34	2.5
757398060	20/60:1	2400/4156GY & 7200/12470GY	120	0.3 W,X/ 0.3 W,X,M,Y	1.1	1.25	1500	15	110	34	2.5
757398113	66.26/112.88:1	7620/13200GY	115/67.5	0.3 W,X,M,Y/ 0.6 W,X,M,Y	1.1	1.25	1500	15	110	34	2.5

*** For HCEP Option add (–H) to the end of the code number.**
Additional ratings available upon request.

Notes:

VRJ-17

15 kV VOLTAGE TRANSFORMER

OUTDOOR
60 Hertz

ARTECHE UR/VR series are dry type outdoor service voltage transformers. The core is encapsulated with Type B epoxy resin which provides excellent internal dielectric properties and mechanical strength. The external layer of Cycloaliphatic Epoxy Resin (CEP) provides resistance to ultraviolet rays and the effects of tracking and erosion on the exterior of the transformer ensuring a long mechanical and electrical life. The transformer is maintenance free.

The external layer can be manufactured with Hydrophobic Cycloaliphatic Epoxy Resin (HCEP) which improves service life expectancy due to its improved tracking and erosion resistance. HCEP additionally increases the transformer's weatherability and offers better performance in heavily polluted environments.

The core is built with high permeability grain oriented silicon steel laminations for low losses. The windings are copper wire with copper plate double isolation. The concentric distribution of the coils prevents magnetic flux leakage, achieving greater accuracy and higher capacity to withstand mechanical stresses in adverse operating conditions.

Partial Discharge measurements exceed the IEEE, CAN/CSA and IEC requirements.

Mechanical characteristics

Insulation Material	Colors	Weight (lbs.)	Creepage distance (in)	Strike distance (in)
Resin	Gray*	97	21.2	10.82

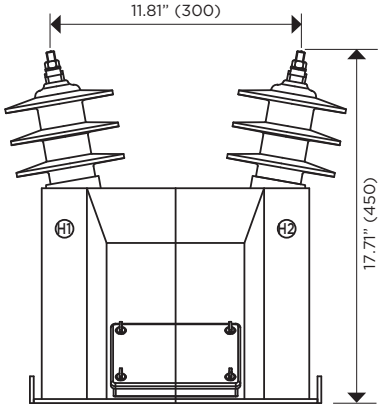

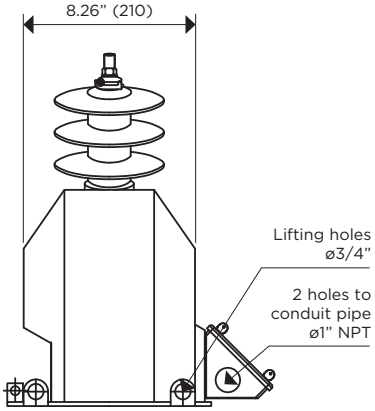

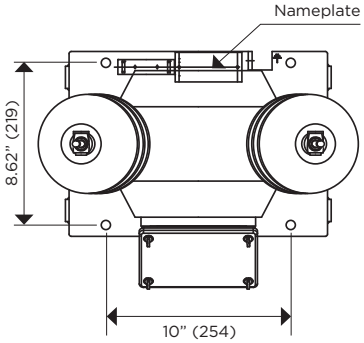

Drawing number:
Fused: 4286571
Unfused: 4286770

CONNECTIONS

PRIMARY TERMINAL

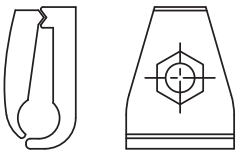

Type: TE-4T
Material: Copper
Range: 8SOL-4TRE

GROUND TERMINAL

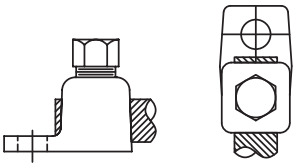

Type: TE-12-250
Material: Copper
Range: 4TRE-250MCM

SECONDARY TERMINAL

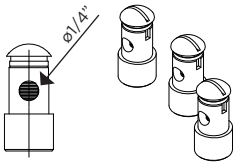

Type: Quick Connector
Material: Brass

MARKING (Single Primary Ratio)

SINGLE SECONDARY

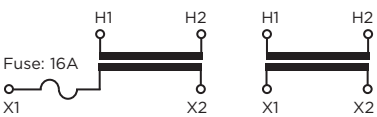

FUSED UNFUSED

ONE SECONDARY WITH TAP

FUSED UNFUSED

Approximate dimensions in inches (mm). • * Brown color available upon request

VRJ-17

15 kV VOLTAGE TRANSFORMER

Electrical characteristics											
Code * (CEP)	Ratio	Primary (V)	Secondary (V)	IEEE Metering Accuracy	Continuous Rated Voltage Factor (Un)	Rated Voltage Factor 30 s (Un)	Thermal Burden (VA)	Nominal Voltage System (kV)	BIL (kV)	Power-Frequency Withstand Voltage (1 min)	
										Primary & Secondary (kV_{rms})	Secondary Winding (kV_{rms})
With FUSE in the secondary box											
757121020	20:1	2400/4160Y	120	0.3 W,X,M,Y	1.1	1.25	1000	15	110	34	2.5
757121030	30:1	3600/3600Y	120	0.3 W,X,M,Y	1.1	1.25	1000	15	110	34	2.5
757121035	35:1	4200/4200Y	120	0.3 W,X,M,Y	1.1	1.25	1000	15	110	34	2.5
757121040	40:1	4800/4800Y	120	0.3 W,X,M,Y	1.1	1.25	1000	15	110	34	2.5
757121060	60:1	7200/12470Y	120	0.3 W,X,M,Y	1.1	1.25	1000	15	110	34	2.5
757121063	63.5:1	7620/13200Y	120	0.3 W,X,M,Y	1.1	1.25	1000	15	110	34	2.5
757121070	70:1	8400/14550Y	120	0.3 W,X,M,Y	1.1	1.25	1000	15	110	34	2.5
757123121	70/121.21:1	8400/14550Y & 14545/14545Y	120	0.3 W,X,M,Y	1.1	1.25	1000	15	110	34	2.5
757121100	100:1	12000/12000Y	120	0.3 W,X,M,Y	1.1	1.25	1000	15	110	34	2.5
757121110	110:1	13200/13200Y	120	0.3 W,X,M,Y	1.1	1.25	1000	15	110	34	2.5
757121120	120:1	14400/14400Y	120	0.3 W,X,M,Y	1.1	1.25	1000	15	110	34	2.5
757129070	70:1	8400/14550Y	120	0.15 W,X	1.1	1.25	1000	15	110	34	2.5
757129100	100:1	12000/12000Y	120	0.15 W,X	1.1	1.25	1000	15	110	34	2.5
757129110	110:1	13200/13200Y	120	0.15 W,X	1.1	1.25	1000	15	110	34	2.5
757129120	120:1	14400/14400Y	120	0.15 W,X	1.1	1.25	1000	15	110	34	2.5
757125020	20:1	2400/4160Y	120	0.3 W,X,M,Y,Z	1.1	1.25	1500	15	110	34	2.5
757125030	30:1	3600/3600Y	120	0.3 W,X,M,Y,Z	1.1	1.25	1500	15	110	34	2.5
757125035	35:1	4200/4200Y	120	0.3 W,X,M,Y.Z	1.1	1.25	1500	15	110	34	2.5
757125040	40:1	4800/4800Y	120	0.3 W,X,M,Y,Z	1.1	1.25	1500	15	110	34	2.5
757125060	60:1	7200/12470Y	120	0.3 W,X,M,Y,Z	1.1	1.25	1500	15	110	34	2.5
757125063	63.5:1	7620/13200Y	120	0.3 W,X,M,Y,Z	1.1	1.25	1500	15	110	34	2.5
757125070	70:1	8400/14550Y	120	0.3 W,X,M,Y,Z	1.1	1.25	1500	15	110	34	2.5
757126121	70/121.21:1	8400/14550Y & 14545/14545Y	120	0.3 W,X,M,Y,Z	1.1	1.25	1500	15	110	34	2.5
757125100	100:1	12000/12000Y	120	0.3 W,X,M,Y,Z	1.1	1.25	1500	15	110	34	2.5
757125110	110:1	13200/13200Y	120	0.3 W,X,M,Y,Z	1.1	1.25	1500	15	110	34	2.5
757125120	120:1	14400/14400Y	120	0.3 W,X,M,Y,Z	1.1	1.25	1500	15	110	34	2.5
757126070	70:1	8400/14550Y	120	0.15 W,X,M,Y	1.1	1.25	1000	15	110	34	2.5
757126100	100:1	12000/12000Y	120	0.15 W,X,M,Y	1.1	1.25	1000	15	110	34	2.5
757126110	110:1	13200/13200Y	120	0.15 W,X,M,Y	1.1	1.25	1000	15	110	34	2.5
757126120	120:1	14400/14400Y	120	0.15 W,X,M,Y	1.1	1.25	1000	15	110	34	2.5

VRJ-17

15 kV VOLTAGE TRANSFORMER

Electrical characteristics											
Code * (CEP)	Ratio	Primary (V)	Secondary (V)	IEEE Metering Accuracy	Continuous Rated Voltage Factor (Un)	Rated Voltage Factor 30 s (Un)	Thermal Burden (VA)	Nominal Voltage System (kV)	BIL (kV)	Power-Frequency Withstand Voltage (1 min)	
										Primary & Secondary (kV_{rms})	Secondary Winding (kV_{rms})
Without FUSE in the secondary box											
757124020	20:1	2400/4160Y	120	0.3 W,X,M,Y	1.1	1.25	1000	15	110	34	2.5
757124030	30:1	3600/3600Y	120	0.3 W,X,M,Y	1.1	1.25	1000	15	110	34	2.5
757124035	35:1	4200/4200Y	120	0.3 W,X,M,Y	1.1	1.25	1000	15	110	34	2.5
757124040	40:1	4800/4800Y	120	0.3 W,X,M,Y	1.1	1.25	1000	15	110	34	2.5
757124060	60:1	7200/12470Y	120	0.3 W,X,M,Y	1.1	1.25	1000	15	110	34	2.5
757124063	63.5:1	7620/13200Y	120	0.3 W,X,M,Y	1.1	1.25	1000	15	110	34	2.5
757124070	70:1	8400/14550Y	120	0.3 W,X,M,Y	1.1	1.25	1000	15	110	34	2.5
757124100	100:1	12000/12000Y	120	0.3 W,X,M,Y	1.1	1.25	1000	15	110	34	2.5
757124110	110:1	13200/13200Y	120	0.3 W,X,M,Y	1.1	1.25	1000	15	110	34	2.5
757124120	120:1	14400/14400Y	120	0.3 W,X,M,Y	1.1	1.25	1000	15	110	34	2.5
757120020	20:1	2400/4160Y	120	0.3 W,X,M,Y,Z	1.1	1.25	1500	15	110	34	2.5
757120030	30:1	3600/3600Y	120	0.3 W,X,M,Y,Z	1.1	1.25	1500	15	110	34	2.5
757120035	35:1	4200/4200Y	120	0.3 W,X,M,Y.Z	1.1	1.25	1500	15	110	34	2.5
757120040	40:1	4800/4800Y	120	0.3 W,X,M,Y,Z	1.1	1.25	1500	15	110	34	2.5
757120060	60:1	7200/12470Y	120	0.3 W,X,M,Y,Z	1.1	1.25	1500	15	110	34	2.5
757120063	63.5:1	7620/13200Y	120	0.3 W,X,M,Y,Z	1.1	1.25	1500	15	110	34	2.5
757120070	70:1	8400/14550Y	120	0.3 W,X,M,Y,Z	1.1	1.25	1500	15	110	34	2.5
757120100	100:1	12000/12000Y	120	0.3 W,X,M,Y,Z	1.1	1.25	1500	15	110	34	2.5
757120110	110:1	13200/13200Y	120	0.3 W,X,M,Y,Z	1.1	1.25	1500	15	110	34	2.5
757120120	120:1	14400/14400Y	120	0.3 W,X,M,Y,Z	1.1	1.25	1500	15	110	34	2.5

*** For HCEP Option add (–H) to the end of the code number.**
Additional ratings available upon request.

VRJ-17

15 kV VOLTAGE TRANSFORMER

Notes:

VRL-17

15 kV VOLTAGE TRANSFORMER

OUTDOOR
60 Hertz

ARTECHE UR/VR series are dry type outdoor service voltage transformers. The core is encapsulated with Type B epoxy resin which provides excellent internal dielectric properties and mechanical strength. The external layer of Cycloaliphatic Epoxy Resin (CEP) provides resistance to ultraviolet rays and the effects of tracking and erosion on the exterior of the transformer ensuring a long mechanical and electrical life. The transformer is maintenance free.

The external layer can be manufactured with Hydrophobic Cycloaliphatic Epoxy Resin (HCEP) which improves service life expectancy due to its improved tracking and erosion resistance. HCEP additionally increases the transformer's weatherability and offers better performance in heavily polluted environments.

The core is built with high permeability grain oriented silicon steel laminations for low losses. The windings are copper wire with copper plate double isolation. The concentric distribution of the coils prevents magnetic flux leakage, achieving greater accuracy and higher capacity to withstand mechanical stresses in adverse operating conditions.

Partial Discharge measurements exceed the IEEE, CAN/CSA and IEC requirements.

Mechanical characteristics

Insulation Material	Colors	Weight (lbs.)	Creepage distance (in)	Strike distance (in)
Resin	Gray*	83.7	21.2	10.23

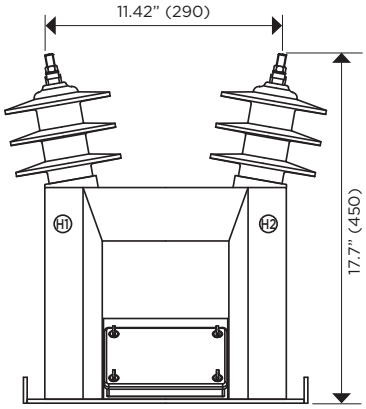

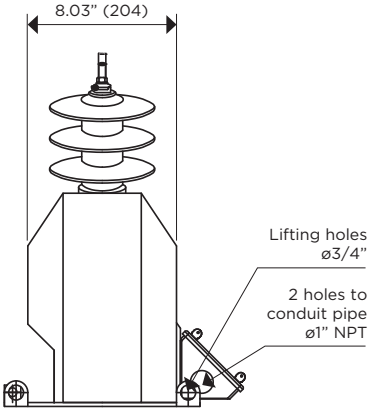

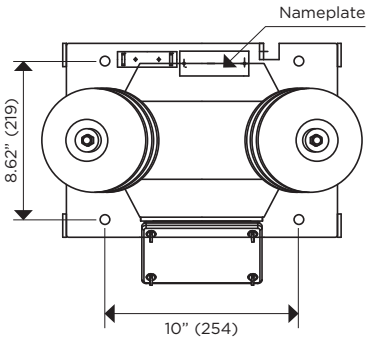

Drawing number:
Fused: 4286569
Unfused: 4286774

CONNECTIONS

PRIMARY TERMINAL

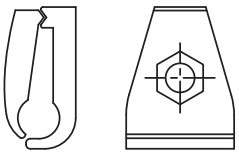

Type: TE-4T
Material: Copper
Range: 8SOL-4TRE

GROUND TERMINAL

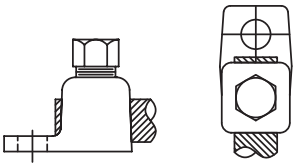

Type: TE-12-250
Material: Copper
Range: 4TRE-250MCM

SECONDARY TERMINAL

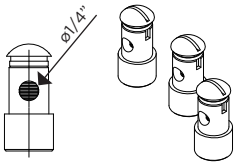

Type: Quick Connector
Material: Brass

MARKING (Single Primary Ratio)

SINGLE SECONDARY

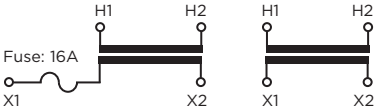

FUSED UNFUSED

Approximate dimensions in inches (mm). • * Brown color available upon request

VRL-17

15 kV VOLTAGE TRANSFORMER

Electrical characteristics

Code * (CEP)	Ratio	Primary (V)	Secondary (V)	IEEE Metering Accuracy	Continuous Rated Voltage Factor (Un)	Rated Voltage Factor 30 s (Un)	Thermal Burden (VA)	Nominal Voltage System (kV)	BIL (kV)	Power-Frequency Withstand Voltage (1 min)	
										Primary & Secondary (kV_{rms})	Secondary Winding (kV_{rms})
With FUSE in the secondary box											
757021020	20:1	2400/4160Y	120	0.3 W,X,M,Y	1.1	1.25	750	15	110	34	2.5
757021035	35:1	4200/4200Y	120	0.3 W,X,M,Y	1.1	1.25	750	15	110	34	2.5
757021040	40:1	4800/4800Y	120	0.3 W,X,M,Y	1.1	1.25	750	15	110	34	2.5
757021042	42:1	5040/5040Y	120	0.3 W,X,M,Y	1.1	1.25	750	15	110	34	2.5
757021060	60:1	7200/12470Y	120	0.3 W,X,M,Y	1.1	1.25	750	15	110	34	2.5
757021063	63.5:1	7620/13200Y	120	0.3 W,X,M,Y	1.1	1.25	750	15	110	34	2.5
757021066	66:1	7920/13700Y	120	0.3 W,X,M,Y	1.1	1.25	750	15	110	34	2.5
757021070	70:1	8400/14550Y	120	0.3 W,X,M,Y	1.1	1.25	750	15	110	34	2.5
757021100	100:1	12000/12000Y	120	0.3 W,X,M,Y	1.1	1.25	750	15	110	34	2.5
757021110	110:1	13200/13200Y	120	0.3 W,X,M,Y	1.1	1.25	750	15	110	34	2.5
757021115	115:1	13800/13800Y	120	0.3 W,X,M,Y	1.1	1.25	750	15	110	34	2.5
757021120	120:1	14400/14400Y	120	0.3 W,X,M,Y	1.1	1.25	750	15	110	34	2.5
757025020	20:1	2400/4160Y	120	0.3 W,X,M,Y	1.1	1.25	1000	15	110	34	2.5
757025035	35:1	4200/4200Y	120	0.3 W,X,M,Y	1.1	1.25	1000	15	110	34	2.5
757025040	40:1	4800/4800Y	120	0.3 W,X,M,Y	1.1	1.25	1000	15	110	34	2.5
757025042	42:1	5040/5040Y	120	0.3 W,X,M,Y	1.1	1.25	1000	15	110	34	2.5
757025060	60:1	7200/12470Y	120	0.3 W,X,M,Y	1.1	1.25	1000	15	110	34	2.5
757025063	63.5:1	7620/13200Y	120	0.3 W,X,M,Y	1.1	1.25	1000	15	110	34	2.5
757025066	66:1	7920/13700Y	120	0.3 W,X,M,Y	1.1	1.25	1000	15	110	34	2.5
757025070	70:1	8400/14550Y	120	0.3 W,X,M,Y	1.1	1.25	1000	15	110	34	2.5
757025100	100:1	12000/12000Y	120	0.3 W,X,M,Y	1.1	1.25	1000	15	110	34	2.5
757025110	110:1	13200/13200Y	120	0.3 W,X,M,Y	1.1	1.25	1000	15	110	34	2.5
757025115	115:1	13800/13800Y	120	0.3 W,X,M,Y	1.1	1.25	1000	15	110	34	2.5
757025120	120:1	14400/14400Y	120	0.3 W,X,M,Y	1.1	1.25	1000	15	110	34	2.5

VRL-17

15 kV VOLTAGE TRANSFORMER

Electrical characteristics

Code * (CEP)	Ratio	Primary (V)	Secondary (V)	IEEE Metering Accuracy	Continuous Rated Voltage Factor (Un)	Rated Voltage Factor 30 s (Un)	Thermal Burden (VA)	Nominal Voltage System (kV)	BIL (kV)	Power-Frequency Withstand Voltage (1 min)	
										Primary & Secondary (kV_{rms})	Secondary Winding (kV_{rms})
Without FUSE in the secondary box											
757024020	20:1	2400/4160Y	120	0.3 W,X,M,Y	1.1	1.25	750	15	110	34	2.5
757024035	35:1	4200/4200Y	120	0.3 W,X,M,Y	1.1	1.25	750	15	110	34	2.5
757024040	40:1	4800/4800Y	120	0.3 W,X,M,Y	1.1	1.25	750	15	110	34	2.5
757024042	42:1	5040/5040Y	120	0.3 W,X,M,Y	1.1	1.25	750	15	110	34	2.5
757024060	60:1	7200/12470Y	120	0.3 W,X,M,Y	1.1	1.25	750	15	110	34	2.5
757024063	63.5:1	7620/13200Y	120	0.3 W,X,M,Y	1.1	1.25	750	15	110	34	2.5
757024066	66:1	7920/13700Y	120	0.3 W,X,M,Y	1.1	1.25	750	15	110	34	2.5
757024070	70:1	8400/14550Y	120	0.3 W,X,M,Y	1.1	1.25	750	15	110	34	2.5
757024100	100:1	12000/12000Y	120	0.3 W,X,M,Y	1.1	1.25	750	15	110	34	2.5
757024110	110:1	13200/13200Y	120	0.3 W,X,M,Y	1.1	1.25	750	15	110	34	2.5
757024115	115:1	13800/13800Y	120	0.3 W,X,M,Y	1.1	1.25	750	15	110	34	2.5
757024120	120:1	14400/14400Y	120	0.3 W,X,M,Y	1.1	1.25	750	15	110	34	2.5
757020020	20:1	2400/4160Y	120	0.3 W,X,M,Y	1.1	1.25	1000	15	110	34	2.5
757020035	35:1	4200/4200Y	120	0.3 W,X,M,Y	1.1	1.25	1000	15	110	34	2.5
757020040	40:1	4800/4800Y	120	0.3 W,X,M,Y	1.1	1.25	1000	15	110	34	2.5
757020042	42:1	5040/5040Y	120	0.3 W,X,M,Y	1.1	1.25	1000	15	110	34	2.5
757020060	60:1	7200/12470Y	120	0.3 W,X,M,Y	1.1	1.25	1000	15	110	34	2.5
757020063	63.5:1	7620/13200Y	120	0.3 W,X,M,Y	1.1	1.25	1000	15	110	34	2.5
757020066	66:1	7920/13700Y	120	0.3 W,X,M,Y	1.1	1.25	1000	15	110	34	2.5
757020070	70:1	8400/14550Y	120	0.3 W,X,M,Y	1.1	1.25	1000	15	110	34	2.5
757020100	100:1	12000/12000Y	120	0.3 W,X,M,Y	1.1	1.25	1000	15	110	34	2.5
757020110	110:1	13200/13200Y	120	0.3 W,X,M,Y	1.1	1.25	1000	15	110	34	2.5
757020115	115:1	13800/13800Y	120	0.3 W,X,M,Y	1.1	1.25	1000	15	110	34	2.5
757020120	120:1	14400/14400Y	120	0.3 W,X,M,Y	1.1	1.25	1000	15	110	34	2.5

*** For HCEP Option add (–H) to the end of the code number.**
Additional ratings available upon request.

VRL-17

15 kV VOLTAGE TRANSFORMER

Notes:

VRN-17

15 kV VOLTAGE TRANSFORMER

OUTDOOR
60 Hertz

ARTECHE UR/VR series are dry type outdoor service voltage transformers. The core is encapsulated with Type B epoxy resin which provides excellent internal dielectric properties and mechanical strength. The external layer of Cycloaliphatic Epoxy Resin (CEP) provides resistance to ultraviolet rays and the effects of tracking and erosion on the exterior of the transformer ensuring a long mechanical and electrical life. The transformer is maintenance free.

The external layer can be manufactured with Hydrophobic Cycloaliphatic Epoxy Resin (HCEP) which improves service life expectancy due to its improved tracking and erosion resistance. HCEP additionally increases the transformer's weatherability and offers better performance in heavily polluted environments.

The core is built with high permeability grain oriented silicon steel laminations for low losses. The windings are copper wire with copper plate double isolation. The concentric distribution of the coils prevents magnetic flux leakage, achieving greater accuracy and higher capacity to withstand mechanical stresses in adverse operating conditions.

Partial Discharge measurements exceed the IEEE, CAN/CSA and IEC requirements.

Mechanical characteristics

Insulation Material	Colors	Weight (lbs.)	Creepage distance (in)	Strike distance (in)
Resin	Gray*	136.4	21.2	8.8

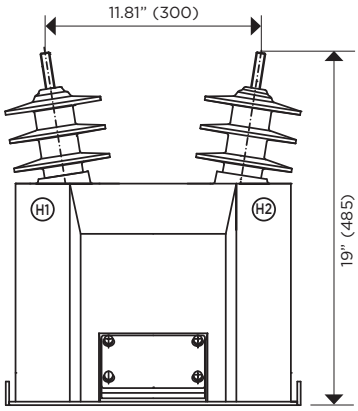

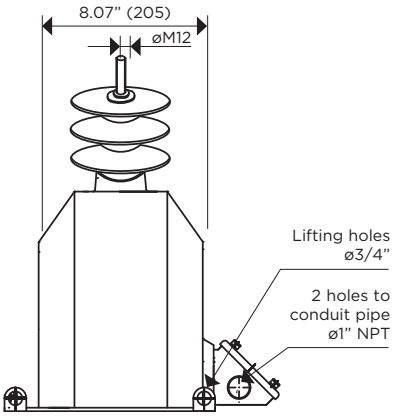

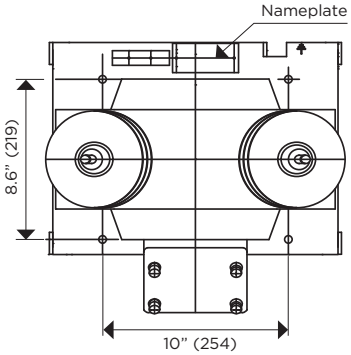

Drawing number:
Fused: 4286575
Unfused: 4286822

CONNECTIONS

PRIMARY TERMINAL

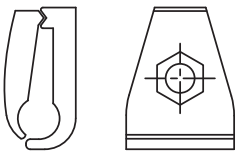

Type: TE-4T
Material: Copper
Range: 8SOL-4TRE

GROUND TERMINAL

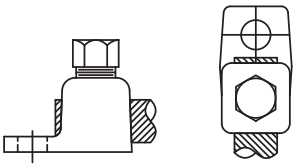

Type: TE-12-250
Material: Copper
Range: 4TRE-250MCM

SECONDARY TERMINAL

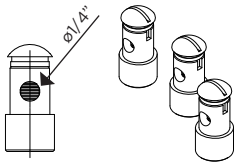

Type: Quick Connector
Material: Brass

MARKING (Single Primary Ratio)

SINGLE SECONDARY

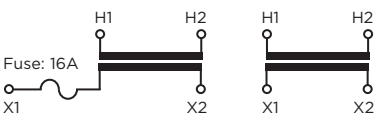

FUSED UNFUSED

ONE SECONDARY WITH TAP

FUSED UNFUSED

Approximate dimensions in inches (mm). • * Brown color available upon request

VRN-17

15 kV VOLTAGE TRANSFORMER

Electrical characteristics

Code * (CEP)	Ratio	Primary (V)	Secondary (V)	IEEE Metering Accuracy	Continuous Rated Voltage Factor (Un)	Rated Voltage Factor 30 s (Un)	Thermal Burden (VA)	Nominal Voltage System (kV)	BIL (kV)	Power-Frequency Withstand Voltage (1 min)	
										Primary & Secondary (kV_{rms})	Secondary Winding (kV_{rms})
With FUSE in the secondary box											
757101020	20:1	2400/4160Y	120	0.3 W,X,M,Y	1.1	1.25	1000	15	110	34	2.5
757101030	30:1	3600/3600Y	120	0.3 W,X,M,Y	1.1	1.25	1000	15	110	34	2.5
757101035	35:1	4200/4200Y	120	0.3 W,X,M,Y	1.1	1.25	1000	15	110	34	2.5
757101040	40:1	4800/4800Y	120	0.3 W,X,M,Y	1.1	1.25	1000	15	110	34	2.5
757101060	60:1	7200/12470Y	120	0.3 W,X,M,Y	1.1	1.25	1000	15	110	34	2.5
757101063	63.5:1	7620/13200Y	120	0.3 W,X,M,Y	1.1	1.25	1000	15	110	34	2.5
757101070	70:1	8400/14550Y	120	0.3 W,X,M,Y	1.1	1.25	1000	15	110	34	2.5
757103121	70/121.2:1	8400/14550Y & 14545/14545Y	120	0.3 W,X,M,Y	1.1	1.25	1000	15	110	34	2.5
757101100	100:1	12000/12000Y	120	0.3 W,X,M,Y	1.1	1.25	1000	15	110	34	2.5
757101110	110:1	13200/13200Y	120	0.3 W,X,M,Y	1.1	1.25	1000	15	110	34	2.5
757101120	120:1	14400/14400Y	120	0.3 W,X,M,Y	1.1	1.25	1000	15	110	34	2.5
757105020	20:1	2400/4160Y	120	0.3 W,X,M,Y,Z	1.1	1.25	1500	15	110	34	2.5
757105030	30:1	3600/3600Y	120	0.3 W,X,M,Y,Z	1.1	1.25	1500	15	110	34	2.5
757105035	35:1	4200/4200Y	120	0.3 W,X,M,Y,Z	1.1	1.25	1500	15	110	34	2.5
757105040	40:1	4800/4800Y	120	0.3 W,X,M,Y,Z	1.1	1.25	1500	15	110	34	2.5
757105060	60:1	7200/12470Y	120	0.3 W,X,M,Y,Z	1.1	1.25	1500	15	110	34	2.5
757105063	63.5:1	7620/13200Y	120	0.3 W,X,M,Y,Z	1.1	1.25	1500	15	110	34	2.5
757105070	70:1	8400/14550Y	120	0.3 W,X,M,Y,Z	1.1	1.25	1500	15	110	34	2.5
757106121	70/121.2:1	8400/14550Y & 14545/14545Y	120	0.3 W,X,M,Y,Z	1.1	1.25	1500	15	110	34	2.5
757105100	100:1	12000/12000Y	120	0.3 W,X,M,Y,Z	1.1	1.25	1500	15	110	34	2.5
757105110	110:1	13200/13200Y	120	0.3 W,X,M,Y,Z	1.1	1.25	1500	15	110	34	2.5
757105120	120:1	14400/14400Y	120	0.3 W,X,M,Y,Z	1.1	1.25	1500	15	110	34	2.5
Without FUSE in the secondary box											
757104020	20:1	2400/4160Y	120	0.3 W,X,M,Y	1.1	1.25	1000	15	110	34	2.5
757104030	30:1	3600/3600Y	120	0.3 W,X,M,Y	1.1	1.25	1000	15	110	34	2.5
757104035	35:1	4200/4200Y	120	0.3 W,X,M,Y	1.1	1.25	1000	15	110	34	2.5
757104040	40:1	4800/4800Y	120	0.3 W,X,M,Y	1.1	1.25	1000	15	110	34	2.5
757104060	60:1	7200/12470Y	120	0.3 W,X,M,Y	1.1	1.25	1000	15	110	34	2.5
757104063	63.5:1	7620/13200Y	120	0.3 W,X,M,Y	1.1	1.25	1000	15	110	34	2.5
757104070	70:1	8400/14550Y	120	0.3 W,X,M,Y	1.1	1.25	1000	15	110	34	2.5
757104100	100:1	12000/12000Y	120	0.3 W,X,M,Y	1.1	1.25	1000	15	110	34	2.5
757104110	110:1	13200/13200Y	120	0.3 W,X,M,Y	1.1	1.25	1000	15	110	34	2.5
757104120	120:1	14400/14400Y	120	0.3 W,X,M,Y	1.1	1.25	1000	15	110	34	2.5
757100020	20:1	2400/4160Y	120	0.3 W,X,M,Y,Z	1.1	1.25	1500	15	110	34	2.5
757100030	30:1	3600/3600Y	120	0.3 W,X,M,Y,Z	1.1	1.25	1500	15	110	34	2.5
757100035	35:1	4200/4200Y	120	0.3 W,X,M,Y,Z	1.1	1.25	1500	15	110	34	2.5
757100040	40:1	4800/4800Y	120	0.3 W,X,M,Y,Z	1.1	1.25	1500	15	110	34	2.5
757100060	60:1	7200/12470Y	120	0.3 W,X,M,Y,Z	1.1	1.25	1500	15	110	34	2.5
757100063	63.5:1	7620/13200Y	120	0.3 W,X,M,Y,Z	1.1	1.25	1500	15	110	34	2.5
757100070	70:1	8400/14550Y	120	0.3 W,X,M,Y,Z	1.1	1.25	1500	15	110	34	2.5
757100100	100:1	12000/12000Y	120	0.3 W,X,M,Y,Z	1.1	1.25	1500	15	110	34	2.5
757100110	110:1	13200/13200Y	120	0.3 W,X,M,Y,Z	1.1	1.25	1500	15	110	34	2.5
757100120	120:1	14400/14400Y	120	0.3 W,X,M,Y,Z	1.1	1.25	1500	15	110	34	2.5

*** For HCEP Option add (–H) to the end of the code number.** • Additional ratings available upon request.

URJ-24

25 kV VOLTAGE TRANSFORMER

OUTDOOR
60 Hertz

ARTECHE UR/VR series are dry type outdoor service voltage transformers. The core is encapsulated with Type B epoxy resin which provides excellent internal dielectric properties and mechanical strength. The external layer of Cycloaliphatic Epoxy Resin (CEP) provides resistance to ultraviolet rays and the effects of tracking and erosion on the exterior of the transformer ensuring a long mechanical and electrical life. The transformer is maintenance free.

The external layer can be manufactured with Hydrophobic Cycloaliphatic Epoxy Resin (HCEP) which improves service life expectancy due to its improved tracking and erosion resistance. HCEP additionally increases the transformer's weatherability and offers better performance in heavily polluted environments.

The core is built with high permeability grain oriented silicon steel laminations for low losses. The windings are copper wire with copper plate double isolation. The concentric distribution of the coils prevents magnetic flux leakage, achieving greater accuracy and higher capacity to withstand mechanical stresses in adverse operating conditions.

Partial Discharge measurements exceed the IEEE, CAN/CSA and IEC requirements.

Mechanical characteristics

Insulation Material	Colors	Weight (lbs.)
Resin	Gray*	93

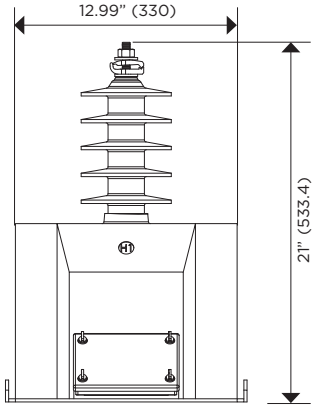

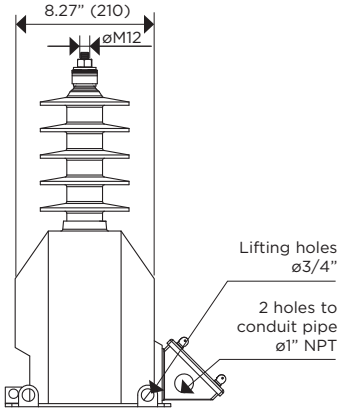

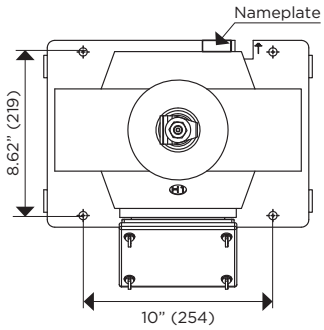

Drawing number:
Fused: 4286593
Unfused: 4286823

CONNECTIONS

PRIMARY TERMINAL

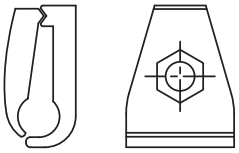

Type: TE-4T
Material: Copper
Range: 8SOL-4TRE

GROUND TERMINAL

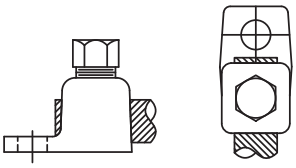

Type: TE-12-250
Material: Copper
Range: 4TRE-250MCM

SECONDARY TERMINAL

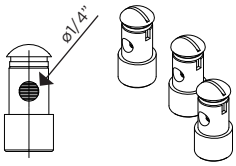

Type: Quick Connector
Material: Brass

MARKING (Single Primary Ratio)

SINGLE SECONDARY

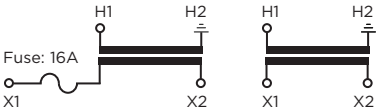

FUSED UNFUSED

Approximate dimensions in inches (mm). • * Brown color available upon request

URJ-24

25 kV VOLTAGE TRANSFORMER

Electrical characteristics

Code * (CEP)	Ratio	Primary (V)	Secondary (V)	IEEE Metering Accuracy	Continuous Rated Voltage Factor (Un)	Rated Voltage Factor 30 s (Un)	Thermal Burden (VA)	Nominal Voltage System (kV)	BIL (kV)	Power-Frequency Withstand Voltage (1 min)	
										Primary & Secondary (kV_{rms})	Secondary Winding (kV_{rms})
With FUSE in the secondary box											
757071060	60:1	7200/12470GY	120	0.3 W,X,M,Y	1.1	1.25	1000	25	150	50	2.5
757071100	100:1	12000/20780GY	120	0.3 W,X,M,Y	1.1	1.25	1000	25	150	50	2.5
757079100	100:1	12000/20780GY	120	0.15 W,X	1.1	1.25	1000	25	150	50	2.5
757071110	110:1	13200/22860GY	120	0.3 W,X,M,Y	1.1	1.25	1000	25	150	50	2.5
757079110	110:1	13200/22863GY	120	0.15 W,X	1.1	1.25	1000	25	150	50	2.5
757071120	120:1	14400/24940GY	120	0.3 W,X,M,Y	1.1	1.25	1000	25	150	50	2.5
757079120	120:1	14400/24250GY	120	0.15 W,X	1.1	1.25	1000	25	150	50	2.5
757071150	150:1	18000/18000GY	120	0.3 W,X,M,Y	1.1	1.25	1000	25	150	50	2.5
757079150	150:1	18000/18000GY	120	0.15 W,X	1.1	1.25	1000	25	150	50	2.5
757071200	200:1	24000 /24000GY	120	0.3 W,X,M,Y	1.1	1.25	1000	25	150	50	2.5
757079200	200:1	24000 /24000GY	120	0.15 W,X	1.1	1.25	1000	25	150	50	2.5
Without FUSE in the secondary box											
757070060	60:1	7200/12470GY	120	0.3 W,X,M,Y	1.1	1.25	1000	25	150	50	2.5
757070100	100:1	12000/20780GY	120	0.3 W,X,M,Y	1.1	1.25	1000	25	150	50	2.5
757070110	110:1	13200/22860GY	120	0.3 W,X,M,Y	1.1	1.25	1000	25	150	50	2.5
757070120	120:1	14400/24940GY	120	0.3 W,X,M,Y	1.1	1.25	1000	25	150	50	2.5
757070150	150:1	18000/18000GY	120	0.3 W,X,M,Y	1.1	1.25	1000	25	150	50	2.5
757070200	200:1	24000 /24000GY	120	0.3 W,X,M,Y	1.1	1.25	1000	25	150	50	2.5

*** For HCEP Option add (–H) to the end of the code number.**
Additional ratings available upon request.

Notes:

URN-24

25 kV VOLTAGE TRANSFORMER

OUTDOOR
60 Hertz

ARTECHE UR/VR series are dry type outdoor service voltage transformers. The core is encapsulated with Type B epoxy resin which provides excellent internal dielectric properties and mechanical strength. The external layer of Cycloaliphatic Epoxy Resin (CEP) provides resistance to ultraviolet rays and the effects of tracking and erosion on the exterior of the transformer ensuring a long mechanical and electrical life. The transformer is maintenance free.

The external layer can be manufactured with Hydrophobic Cycloaliphatic Epoxy Resin (HCEP) which improves service life expectancy due to its improved tracking and erosion resistance. HCEP additionally increases the transformer's weatherability and offers better performance in heavily polluted environments.

The core is built with high permeability grain oriented silicon steel laminations for low losses. The windings are copper wire with copper plate double isolation. The concentric distribution of the coils prevents magnetic flux leakage, achieving greater accuracy and higher capacity to withstand mechanical stresses in adverse operating conditions.

Partial Discharge measurements exceed the IEEE, CAN/CSA and IEC requirements.

Mechanical characteristics

Insulation Material	Colors	Weight (lbs.)	Creepage distance (in)	Strike distance (in)
Resin	Gray*	136.4	27.5	14.69

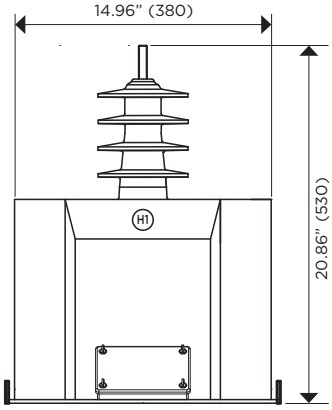

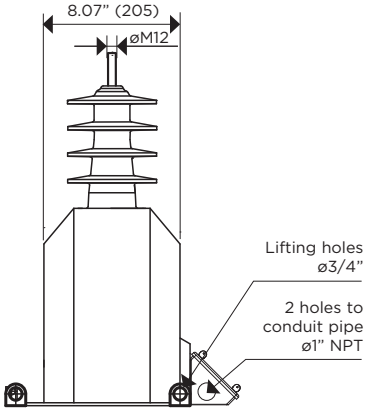

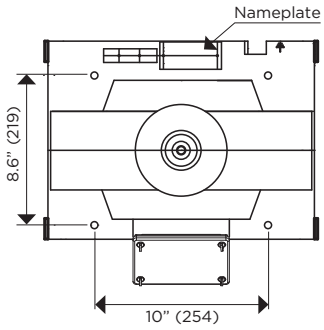

Drawing number:
Fused: 4286576
Unfused: 4286772

CONNECTIONS

PRIMARY TERMINAL

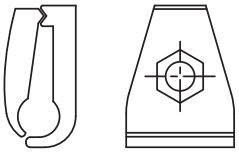

Type: TE-4T
Material: Copper
Range: 8SOL-4TRE

GROUND TERMINAL

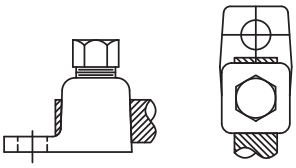

Type: TE-12-250
Material: Copper
Range: 4TRE-250MCM

SECONDARY TERMINAL

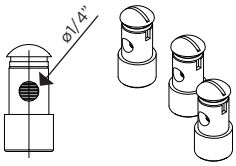

Type: Quick Connector
Material: Brass

MARKING (Single Primary Ratio)

SINGLE SECONDARY

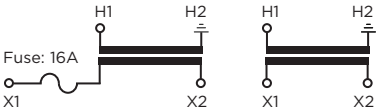

FUSED UNFUSED

ONE SECONDARY WITH TAP

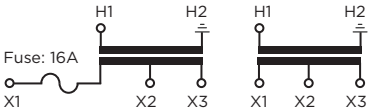

FUSED UNFUSED

Approximate dimensions in inches (mm). • * Brown color available upon request

URN-24

25 kV VOLTAGE TRANSFORMER

Electrical characteristics

Code * (CEP)	Ratio	Primary (V)	Secondary (V)	IEEE Metering Accuracy	Continuous Rated Voltage Factor (Un)	Rated Voltage Factor 30 s (Un)	Thermal Burden (VA)	Nominal Voltage System (kV)	BIL (kV)	Power-Frequency Withstand Voltage (1 min)	
										Primary & Secondary (kV_{rms})	Secondary Winding (kV_{rms})
With FUSE in the secondary box											
757441100	100:1	12000/20784GY	120	0.3 W,X,M,Y	1.1	1.5	1000	25	150	50	2.5
757441110	110:1	13200/22863GY	120	0.3 W,X,M,Y	1.1	1.5	1000	25	150	50	2.5
757441120	120:1	14400/24940GY	120	0.3 W,X,M,Y	1.1	1.5	1000	25	150	50	2.5
757443120	60/120:1	7200/12470GY & 14400/24940GY	120	0.3 W,X / 0.3W,X,M,Y	1.1	1.5	1000	25	150	50	2.5
757443200	120/200:1	14400/24940GY	120/72	0.3 W,X,M,Y	1.1	1.5	1000	25	150	50	2.5
757445100	100:1	12000/20784GY	120	0.3 W,X,M,Y	1.1	1.25	1500	25	150	50	2.5
757445110	110:1	13200/22863GY	120	0.3 W,X,M,Y	1.1	1.25	1500	25	150	50	2.5
757445120	120:1	14400/24940GY	120	0.3 W,X,M,Y	1.1	1.25	1500	25	150	50	2.5
757446120	60/120:1	7200/12470GY & 14400/24940GY	120	0.3 W,X / 0.3W,X,M,Y	1.1	1.25	1500	25	150	50	2.5
757446200	120/200:1	14400/24940GY	120/72	0.3 W,X,M,Y	1.1	1.25	1500	25	150	50	2.5
Without FUSE in the secondary box											
757444100	100:1	12000/20784GY	120	0.3 W,X,M,Y	1.1	1.5	1000	25	150	50	2.5
757444110	110:1	13200/22863GY	120	0.3 W,X,M,Y	1.1	1.5	1000	25	150	50	2.5
757444120	120:1	14400/24940GY	120	0.3 W,X,M,Y	1.1	1.5	1000	25	150	50	2.5
757444200	120/200:1	14400/24940GY	120/72	0.3 W,X,M,Y	1.1	1.5	1000	25	150	50	2.5
757440100	100:1	12000/20784GY	120	0.3 W,X,M,Y	1.1	1.25	1500	25	150	50	2.5
757440110	110:1	13200/22863GY	120	0.3 W,X,M,Y	1.1	1.25	1500	25	150	50	2.5
757440120	120:1	14400/24940GY	120	0.3 W,X,M,Y	1.1	1.25	1500	25	150	50	2.5
757448200	120/200:1	14400/24940GY	120/72	0.3 W,X,M,Y	1.1	1.25	1500	25	150	50	2.5

*** For HCEP Option add (–H) to the end of the code number.**
Additional ratings available upon request.

Notes:

VRJ-24

25 kV VOLTAGE TRANSFORMER

OUTDOOR
60 Hertz

ARTECHE UR/VR series are dry type outdoor service voltage transformers. The core is encapsulated with Type B epoxy resin which provides excellent internal dielectric properties and mechanical strength. The external layer of Cycloaliphatic Epoxy Resin (CEP) provides resistance to ultraviolet rays and the effects of tracking and erosion on the exterior of the transformer ensuring a long mechanical and electrical life. The transformer is maintenance free.

The external layer can be manufactured with Hydrophobic Cycloaliphatic Epoxy Resin (HCEP) which improves service life expectancy due to its improved tracking and erosion resistance. HCEP additionally increases the transformer's weatherability and offers better performance in heavily polluted environments.

The core is built with high permeability grain oriented silicon steel laminations for low losses. The windings are copper wire with copper plate double isolation. The concentric distribution of the coils prevents magnetic flux leakage, achieving greater accuracy and higher capacity to withstand mechanical stresses in adverse operating conditions.

Partial Discharge measurements exceed the IEEE, CAN/CSA and IEC requirements.

Mechanical characteristics

Insulation Material	Colors	Weight (lbs.)	Creepage distance (in)	Strike distance (in)
Resin	Gray*	99	33.46	10.63

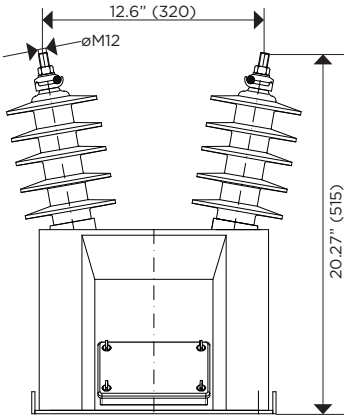

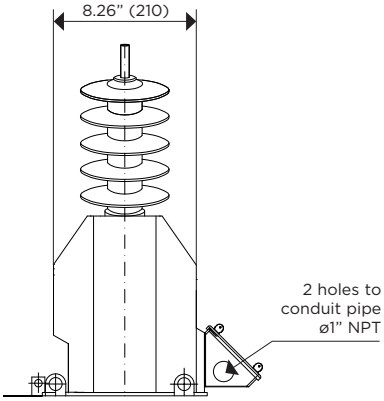

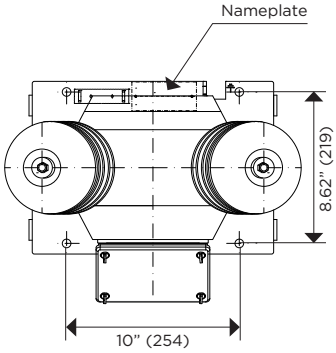

Drawing number:
Fused: 4286574
Unfused: 4286824

CONNECTIONS

PRIMARY TERMINAL

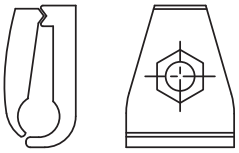

Type: TE-4T
Material: Copper
Range: 8SOL-4TRE

GROUND TERMINAL

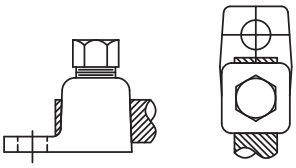

Type: TE-12-250
Material: Copper
Range: 4TRE-250MCM

SECONDARY TERMINAL

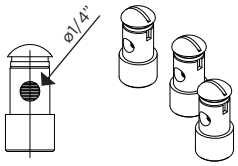

Type: Quick Connector
Material: Brass

MARKING (Single Primary Ratio)

SINGLE SECONDARY

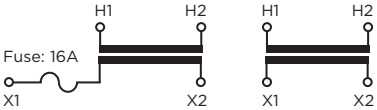

FUSED UNFUSED

Approximate dimensions in inches (mm). • * Brown color available upon request

VRJ-24

25 kV VOLTAGE TRANSFORMER

Electrical characteristics

Code * (CEP)	Ratio	Primary (V)	Secondary (V)	IEEE Metering Accuracy	Continuous Rated Voltage Factor (Un)	Rated Voltage Factor 30 s (Un)	Thermal Burden (VA)	Nominal Voltage System (kV)	BIL (kV)	Power-Frequency Withstand Voltage (1 min)	
										Primary & Secondary (kV_{rms})	Secondary Winding (kV_{rms})
With FUSE in the secondary box											
757141060	60:1	7200/12470Y	120	0.3 W,X,M,Y	1.1	1.25	1000	25	150	50	2.5
757141100	100:1	12000/20780Y	120	0.3 W,X,M,Y	1.1	1.25	1000	25	150	50	2.5
757149100	100:1	12000/20780Y	120	0.15 W,X	1.1	1.25	1000	25	150	50	2.5
757141110	110:1	13200/22860Y	120	0.3 W,X,M,Y	1.1	1.25	1000	25	150	50	2.5
757149110	110:1	13200/22860Y	120	0.15 W,X	1.1	1.25	1000	25	150	50	2.5
757141120	120:1	14400/24940Y	120	0.3 W,X,M,Y	1.1	1.25	1000	25	150	50	2.5
757149120	120:1	14400/24250Y	120	0.15 W,X	1.1	1.25	1000	25	150	50	2.5
757141150	150:1	18000/18000Y	120	0.3 W,X,M,Y	1.1	1.25	1000	25	150	50	2.5
757149150	150:1	18000/18000Y	120	0.15 W,X	1.1	1.25	1000	25	150	50	2.5
757141200	200:1	24000 /24000Y	120	0.3 W,X,M,Y	1.1	1.25	1000	25	150	50	2.5
757149200	200:1	24000 /24000Y	120	0.15 W,X	1.1	1.25	1000	25	150	50	2.5
Without FUSE in the secondary box											
757140060	60:1	7200/12470Y	120	0.3 W,X,M,Y	1.1	1.25	1000	25	150	50	2.5
757140100	100:1	12000/20780Y	120	0.3 W,X,M,Y	1.1	1.25	1000	25	150	50	2.5
757140110	110:1	13200/22860Y	120	0.3 W,X,M,Y	1.1	1.25	1000	25	150	50	2.5
757140120	120:1	14400/24940Y	120	0.3 W,X,M,Y	1.1	1.25	1000	25	150	50	2.5
757140150	150:1	18000/18000Y	120	0.3 W,X,M,Y	1.1	1.25	1000	25	150	50	2.5
757140200	200:1	24000 /24000Y	120	0.3 W,X,M,Y	1.1	1.25	1000	25	150	50	2.5

*** For HCEP Option add (–H) to the end of the code number.**
Additional ratings available upon request.

Notes:

VRN-24

25 kV VOLTAGE TRANSFORMER

OUTDOOR
60 Hertz

ARTECHE UR/VR series are dry type outdoor service voltage transformers. The core is encapsulated with Type B epoxy resin which provides excellent internal dielectric properties and mechanical strength. The external layer of Cycloaliphatic Epoxy Resin (CEP) provides resistance to ultraviolet rays and the effects of tracking and erosion on the exterior of the transformer ensuring a long mechanical and electrical life. The transformer is maintenance free.

The external layer can be manufactured with Hydrophobic Cycloaliphatic Epoxy Resin (HCEP) which improves service life expectancy due to its improved tracking and erosion resistance. HCEP additionally increases the transformer's weatherability and offers better performance in heavily polluted environments.

The core is built with high permeability grain oriented silicon steel laminations for low losses. The windings are copper wire with copper plate double isolation. The concentric distribution of the coils prevents magnetic flux leakage, achieving greater accuracy and higher capacity to withstand mechanical stresses in adverse operating conditions.

Partial Discharge measurements exceed the IEEE, CAN/CSA and IEC requirements.

Mechanical characteristics

Insulation Material	Colors	Weight (lbs.)	Creepage distance (in)	Strike distance (in)
Resin	Gray*	140	31.88	10.82

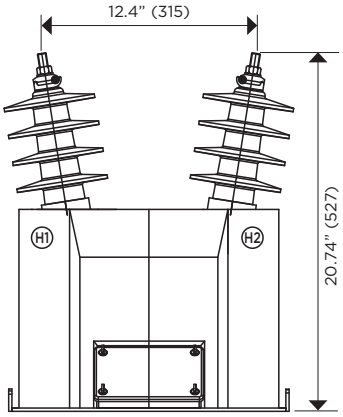

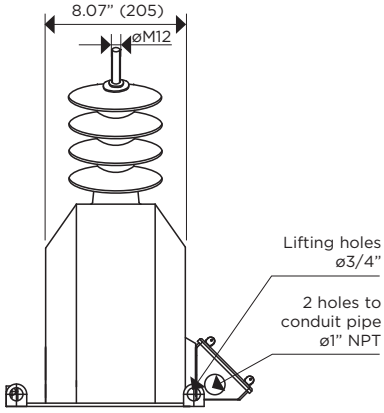

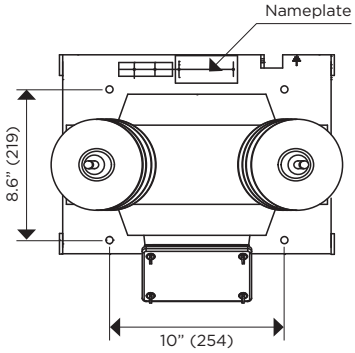

Drawing number:
Fused: 4286577
Unfused: 4286771

CONNECTIONS

PRIMARY TERMINAL

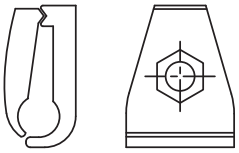

Type: TE-4T
Material: Copper
Range: 8SOL-4TRE

GROUND TERMINAL

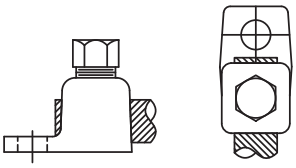

Type: TE-12-250
Material: Copper
Range: 4TRE-250MCM

SECONDARY TERMINAL

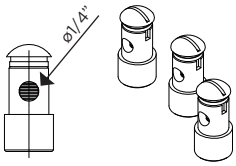

Type: Quick Connector
Material: Brass

MARKING (Single Primary Ratio)

SINGLE SECONDARY

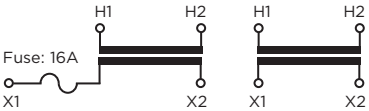

FUSED UNFUSED

ONE SECONDARY WITH TAP

FUSED UNFUSED

Approximate dimensions in inches (mm). • * Brown color available upon request

VRN-24

25 kV VOLTAGE TRANSFORMER

Electrical characteristics											
Code * (CEP)	Ratio	Primary (V)	Secondary (V)	IEEE Metering Accuracy	Continuous Rated Voltage Factor (Un)	Rated Voltage Factor 30 s (Un)	Thermal Burden (VA)	Nominal Voltage System (kV)	BIL (kV)	Power-Frequency Withstand Voltage (1 min)	
										Primary & Secondary (kV_{rms})	Secondary Winding (kV_{rms})
With FUSE in the secondary box											
757201060	60:1	7200/12470Y	120	0.3 W,X,M,Y	1.1	1.25	1000	25	150	50	2.5
757203120	60/120:1	7200/12470Y & 14400/24940Y	120	0.3 W,X / 0.3W,X,M,Y	1.1	1.25	1000	25	150	50	2.5
757201100	100:1	12000/20780Y	120	0.3 W,X,M,Y	1.1	1.25	1000	25	150	50	2.5
757201110	110:1	13200/22860Y	120	0.3 W,X,M,Y	1.1	1.25	1000	25	150	50	2.5
757201120	120:1	14400/24940Y	120	0.3 W,X,M,Y	1.1	1.25	1000	25	150	50	2.5
757203200	120/200:1	14400/24250Y	120/72	0.3 W,X,M,Y / 0.3 W,X,M,Y	1.1	1.25	1000	25	150	50	2.5
757201150	150:1	18000/18000Y	120	0.3 W,X,M,Y	1.1	1.25	1000	25	150	50	2.5
757201200	200:1	24000 /24000Y	120	0.3 W,X,M,Y	1.1	1.25	1000	25	150	50	2.5
757209100	100:1	12000/20780Y	120	0.15 W,X	1.1	1.25	1000	25	150	50	2.5
757209110	110:1	13200/22860Y	120	0.15 W,X	1.1	1.25	1000	25	150	50	2.5
757209120	120:1	14400/24250Y	120	0.15 W,X	1.1	1.25	1000	25	150	50	2.5
757209150	150:1	18000/18000Y	120	0.15 W,X	1.1	1.25	1000	25	150	50	2.5
757209200	200:1	24000 /24000Y	120	0.15 W,X	1.1	1.25	1000	25	150	50	2.5
757205060	60:1	7200/12470Y	120	0.3 W,X,M,Y	1.1	1.25	1500	25	150	50	2.5
757206120	60/120:1	7200/12470Y & 14400/24940Y	120	0.3 W,X / 0.3W,X,M,Y	1.1	1.25	1500	25	150	50	2.5
757205100	100:1	12000/20780Y	120	0.3 W,X,M,Y	1.1	1.25	1500	25	150	50	2.5
757205110	110:1	13200/22860Y	120	0.3 W,X,M,Y	1.1	1.25	1500	25	150	50	2.5
757205120	120:1	14400/24940Y	120	0.3 W,X,M,Y	1.1	1.25	1500	25	150	50	2.5
757206200	120/200:1	14400/24250Y	120/72	0.3 W,X,M,Y / 0.3 W,X,M,Y	1.1	1.25	1500	25	150	50	2.5
757205150	150:1	18000/18000Y	120	0.3 W,X,M,Y	1.1	1.25	1500	25	150	50	2.5
757205200	200:1	24000 /24000Y	120	0.3 W,X,M,Y	1.1	1.25	1500	25	150	50	2.5
757206100	100:1	12000/20780Y	120	0.15 W,X	1.1	1.25	1500	25	150	50	2.5
757206110	110:1	13200/22860Y	120	0.15 W,X	1.1	1.25	1500	25	150	50	2.5
757206150	150:1	18000/18000Y	120	0.15 W,X	1.1	1.25	1500	25	150	50	2.5
Without FUSE in the secondary box											
757204060	60:1	7200/12470Y	120	0.3 W,X,M,Y	1.1	1.25	1000	25	150	50	2.5
757204100	100:1	12000/20780Y	120	0.3 W,X,M,Y	1.1	1.25	1000	25	150	50	2.5
757204110	110:1	13200/22860Y	120	0.3 W,X,M,Y	1.1	1.25	1000	25	150	50	2.5
757204120	120:1	14400/24940Y	120	0.3 W,X,M,Y	1.1	1.25	1000	25	150	50	2.5
757204150	150:1	18000/18000Y	120	0.3 W,X,M,Y	1.1	1.25	1000	25	150	50	2.5
757204200	200:1	24000/24000Y	120	0.3 W,X,M,Y	1.1	1.25	1000	25	150	50	2.5
757200060	60:1	7200/12470Y	120	0.3 W,X,M,Y	1.1	1.25	1500	25	150	50	2.5
757200100	100:1	12000/20780Y	120	0.3 W,X,M,Y	1.1	1.25	1500	25	150	50	2.5
757200110	110:1	13200/22860Y	120	0.3 W,X,M,Y	1.1	1.25	1500	25	150	50	2.5
757200120	120:1	14400/24940Y	120	0.3 W,X,M,Y	1.1	1.25	1500	25	150	50	2.5
757200150	150:1	18000/18000Y	120	0.3 W,X,M,Y	1.1	1.25	1500	25	150	50	2.5
757200200	200:1	24000/24000Y	120	0.3 W,X,M,Y	1.1	1.25	1500	25	150	50	2.5

*** For HCEP Option add (–H) to the end of the code number.**
Additional ratings available upon request.

URS-36

34.5 kV VOLTAGE TRANSFORMER

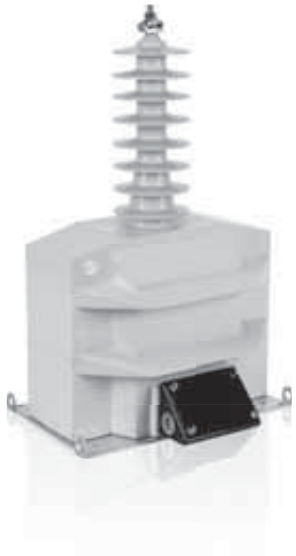

OUTDOOR
60 Hertz

ARTECHE UR/VR series are dry type outdoor service voltage transformers. The core is encapsulated with Type B epoxy resin which provides excellent internal dielectric properties and mechanical strength. The external layer of Cycloaliphatic Epoxy Resin (CEP) provides resistance to ultraviolet rays and the effects of tracking and erosion on the exterior of the transformer ensuring a long mechanical and electrical life. The transformer is maintenance free.

The external layer can be manufactured with Hydrophobic Cycloaliphatic Epoxy Resin (HCEP) which improves service life expectancy due to its improved tracking and erosion resistance. HCEP additionally increases the transformer's weatherability and offers better performance in heavily polluted environments.

The core is built with high permeability grain oriented silicon steel laminations for low losses. The windings are copper wire with copper plate double isolation. The concentric distribution of the coils prevents magnetic flux leakage, achieving greater accuracy and higher capacity to withstand mechanical stresses in adverse operating conditions.

Partial Discharge measurements exceed the IEEE, CAN/CSA and IEC requirements.

Mechanical characteristics

Insulation Material	Colors	Weight (lbs.)	Creepage distance (in)	Strike distance (in)
Resin	Gray*	174	49.6	25.2

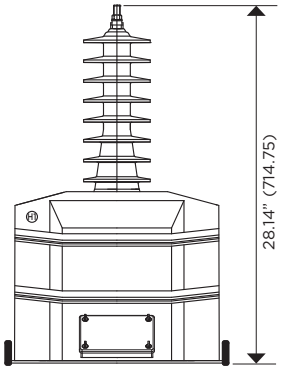

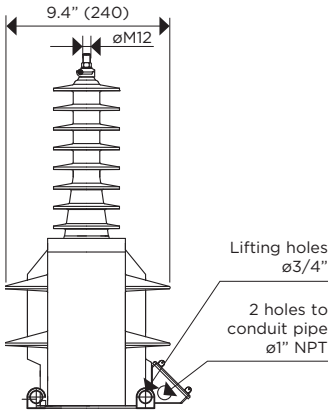

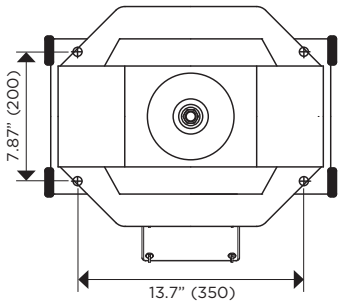

Drawing number:
Fused: 4286578
Unfused: 4286773

CONNECTIONS

PRIMARY TERMINAL

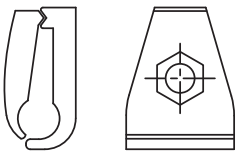

Type: TE-4T
Material: Copper
Range: 8SOL-4TRE

GROUND TERMINAL

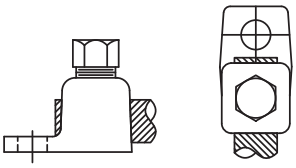

Type: TE-12-250
Material: Copper
Range: 4TRE-250MCM

SECONDARY TERMINAL

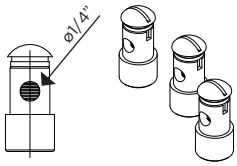

Type: Quick Connector
Material: Brass

MARKING (Single Primary Ratio)

SINGLE SECONDARY

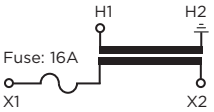

FUSED

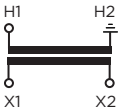

UNFUSED

ONE SECONDARY WITH TAP

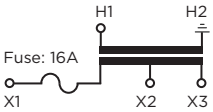

FUSED

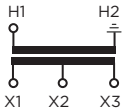

UNFUSED

Approximate dimensions in inches (mm). • * Brown color available upon request

URS-36

34.5 kV VOLTAGE TRANSFORMER

Electrical characteristics

Code * (CEP)	Ratio	Primary (V)	Secondary (V)	IEEE Metering Accuracy	Continuous Rated Voltage Factor (Un)	Rated Voltage Factor 30 s (Un)	Thermal Burden (VA)	Nominal Voltage System (kV)	BIL (kV)	Power-Frequency Withstand Voltage (1 min)	
										Primary & Secondary (kV_{rms})	Secondary Winding (kV_{rms})
With FUSE in the secondary box											
757861140	140:1	16800/29098GY	120	0.3 W,X,M,Y	1.1	1.73	1000	34.5	200	70	2.5
757863240	140/240:1	16100/27886GY	115/67.08	0.3 W,X,M,Y	1.1	1.73	1000	34.5	200	70	2.5
757861166	166:1	19920/34500GY	120	0.3 W,X,M,Y	1.1	1.73	1000	34.5	200	70	2.5
757861175	175:1	20125/34857GY	115	0.3 W,X,M,Y	1.1	1.73	1000	34.5	200	70	2.5
757863300	175/300:1	20125/34857GY	115/67.08	0.3 W,X,M,Y	1.1	1.73	1000	34.5	200	70	2.5
Without FUSE in the secondary box											
757860140	140:1	16800/29098GY	120	0.3 W,X,M,Y	1.1	1.73	1000	34.5	200	70	2.5
757868240	140/240:1	16100/27886GY	115/67.08	0.3 W,X,M,Y	1.1	1.73	1000	34.5	200	70	2.5
757860166	166:1	19920/34500GY	120	0.3 W,X,M,Y	1.1	1.73	1000	34.5	200	70	2.5
757860175	175:1	20125/34857GY	115	0.3 W,X,M,Y	1.1	1.73	1000	34.5	200	70	2.5
757868300	175/300:1	20125/34857GY	115/67.08	0.3 W,X,M,Y	1.1	1.73	1000	34.5	200	70	2.5

*** For HCEP Option add (–H) to the end of the code number.**
Additional ratings available upon request.

Notes:

URU-36

34.5 kV VOLTAGE TRANSFORMER

OUTDOOR
60 Hertz

ARTECHE UR/VR series are dry type outdoor service voltage transformers. The core is encapsulated with Type B epoxy resin which provides excellent internal dielectric properties and mechanical strength. The external layer of Cycloaliphatic Epoxy Resin (CEP) provides resistance to ultraviolet rays and the effects of tracking and erosion on the exterior of the transformer ensuring a long mechanical and electrical life. The transformer is maintenance free.

The external layer can be manufactured with Hydrophobic Cycloaliphatic Epoxy Resin (HCEP) which improves service life expectancy due to its improved tracking and erosion resistance. HCEP additionally increases the transformer's weatherability and offers better performance in heavily polluted environments.

The core is built with high permeability grain oriented silicon steel laminations for low losses. The windings are copper wire with copper plate double isolation. The concentric distribution of the coils prevents magnetic flux leakage, achieving greater accuracy and higher capacity to withstand mechanical stresses in adverse operating conditions.

Partial Discharge measurements exceed the IEEE, CAN/CSA and IEC requirements.

Mechanical characteristics

Insulation Material	Colors	Weight (lbs.)	Creepage distance (in)	Strike distance (in)
Resin	Gray*	273	50.5	25.2

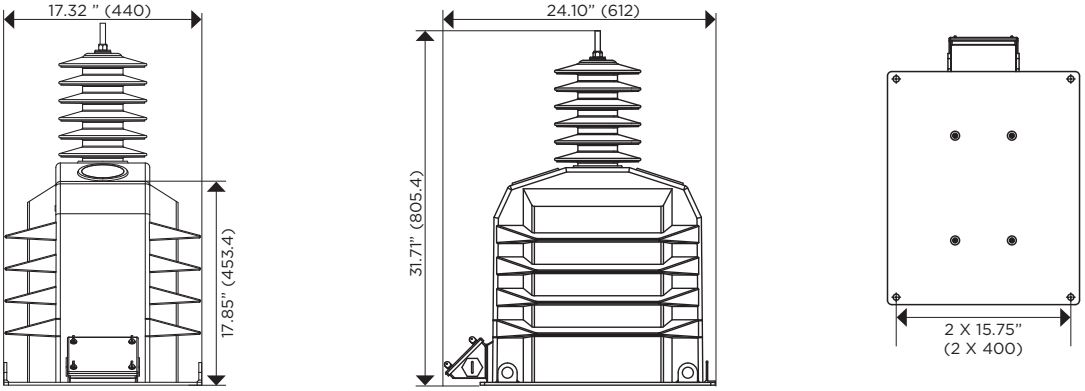

Drawing number: 4288115

CONNECTIONS

PRIMARY TERMINAL

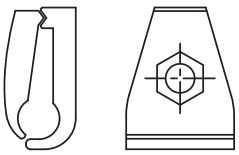

Type: TE-4T
Material: Copper
Range: 8SOL-4TRE

GROUND TERMINAL

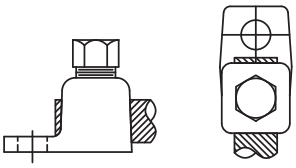

Type: TE-12-250
Material: Copper
Range: 4TRE-250MCM

SECONDARY TERMINAL

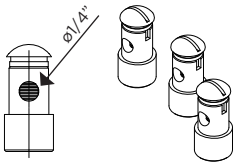

Type: Quick Connector
Material: Brass

MARKING (Single Primary Ratio)

SINGLE SECONDARY	ONE SECONDARY WITH TAP	TWO SECONDARY WITH TAP

Approximate dimensions in inches (mm). • * Brown color available upon request

URU-36

34.5 kV VOLTAGE TRANSFORMER

Electrical characteristics

Code * (CEP)	Ratio	Primary (V)	Secondary (V)	IEEE Metering Accuracy	Continuous Rated Voltage Factor (Un)	Rated Voltage Factor 30 s (Un)	Thermal Burden (VA)	Nominal Voltage System (kV)	BIL (kV)	Power-Frequency Withstand Voltage (1 min)	
										Primary & Secondary (kV_{rms})	Secondary Winding (kV_{rms})
757880175	175:1	20125/34857GY	115	0.3 W,X,M,Y,Z,ZZ	1.1	1.25	2500	34.5	200	70	2.5
757883300	175/300:1-1	20125/34857GY	115/67.08	0.3 W,X,M,Y,Z	1.1	1.25	1250 & 1250	34.5	200	70	2.5

*** For HCEP Option add (–H) to the end of the code number.**
Additional ratings available upon request.

Notes:

VRS-36

34.5 kV VOLTAGE TRANSFORMER

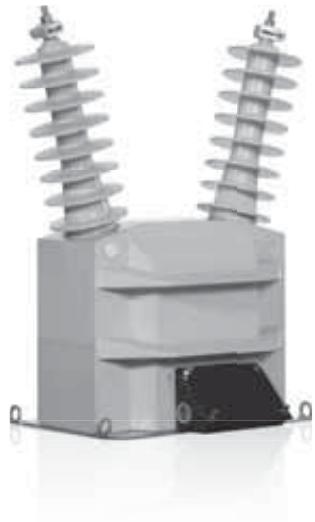

OUTDOOR
60 Hertz

ARTECHE UR/VR series are dry type outdoor service voltage transformers. The core is encapsulated with Type B epoxy resin which provides excellent internal dielectric properties and mechanical strength. The external layer of Cycloaliphatic Epoxy Resin (CEP) provides resistance to ultraviolet rays and the effects of tracking and erosion on the exterior of the transformer ensuring a long mechanical and electrical life. The transformer is maintenance free.

The external layer can be manufactured with Hydrophobic Cycloaliphatic Epoxy Resin (HCEP) which improves service life expectancy due to its improved tracking and erosion resistance. HCEP additionally increases the transformer's weatherability and offers better performance in heavily polluted environments.

The core is built with high permeability grain oriented silicon steel laminations for low losses. The windings are copper wire with copper plate double isolation. The concentric distribution of the coils prevents magnetic flux leakage, achieving greater accuracy and higher capacity to withstand mechanical stresses in adverse operating conditions.

Partial Discharge measurements exceed the IEEE, CAN/CSA and IEC requirements.

Mechanical characteristics

Insulation Material	Colors	Weight (lbs.)	Creepage distance (in)	Strike distance (in)
Resin	Gray*	183	49.2	183

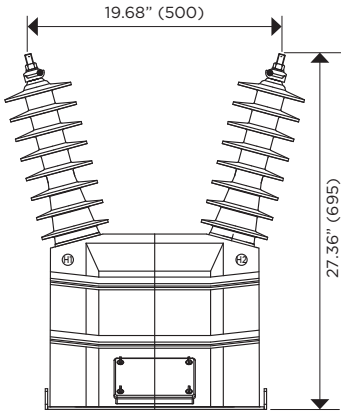

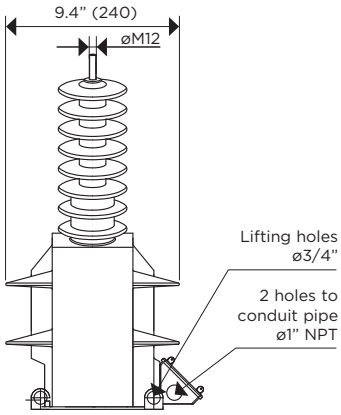

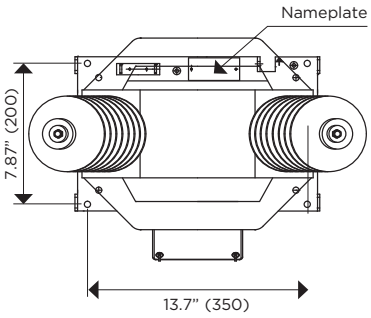

Drawing number:
Fused: 4286579
Unfused: 4286825

CONNECTIONS

PRIMARY TERMINAL

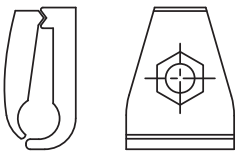

Type: TE-4T
Material: Copper
Range: 8SOL-4TRE

GROUND TERMINAL

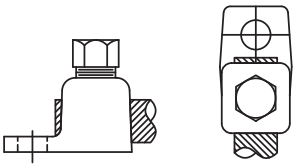

Type: TE-12-250
Material: Copper
Range: 4TRE-250MCM

SECONDARY TERMINAL

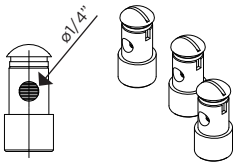

Type: Quick Connector
Material: Brass

MARKING (Single Primary Ratio)

SINGLE SECONDARY

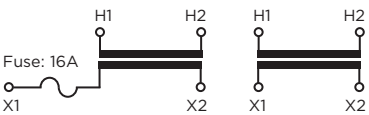

FUSED UNFUSED

ONE SECONDARY WITH TAP

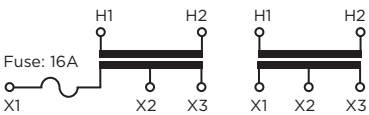

FUSED UNFUSED

Approximate dimensions in inches (mm). • * Brown color available upon request

VRS-36

34.5 kV VOLTAGE TRANSFORMER

Electrical characteristics											
Code * (CEP)	Ratio	Primary (V)	Secondary (V)	IEEE Metering Accuracy	Continuous Rated Voltage Factor (Un)	Rated Voltage Factor 30 s (Un)	Thermal Burden (VA)	Nominal Voltage System (kV)	BIL (kV)	Power-Frequency Withstand Voltage (1 min)	
										Primary & Secondary (kV_{rms})	Secondary Winding (kV_{rms})
With FUSE in the secondary box											
757923166	69.25 / 166:1	8310/14393Y & 19920/34500Y	120	0.3 W,X,M,Y	1.1	1.25	1000	34.5	200	70	2.5
757921140	140:1	16800/29098Y	120	0.3 W,X,M,Y	1.1	1.25	1000	34.5	200	70	2.5
757923240	140/240:1	16100/27886Y	115/67.08	0.3 W,X,M,Y	1.1	1.25	1000	34.5	200	70	2.5
757921166	166:1	19920/34500Y	120	0.3 W,X,M,Y	1.1	1.25	1000	34.5	200	70	2.5
757921175	175:1	20125/34857Y	115	0.3 W,X,M,Y	1.1	1.25	1000	34.5	200	70	2.5
757923300	175/300:1	20125/34857Y	115/67.08	0.3 W,X,M,Y	1.1	1.25	1000	34.5	200	70	2.5
757921220	220:1	26400/26400Y	120	0.3 W,X,M,Y,Z	1.1	1.25	1000	34.5	200	70	2.5
757923400	240/400:1	27600/27600Y	115 / 69	0.3 W,X,M,Y	1.1	1.25	1000	34.5	200	70	2.5
757921300	300:1	34500/34500Y	115	0.3 W,X,M,Y,Z	1.1	1.25	1000	34.5	200	70	2.5
757923500	300/500:1	34500/34500Y	115/69	0.3 W,X,M,Y	1.1	1.25	1000	34.5	200	70	2.5
757929140	140:1	16800/29098Y	120	0.15 W,X	1.1	1.25	1000	34.5	200	70	2.5
757929166	166:1	19920/34500Y	120	0.15 W,X	1.1	1.25	1000	34.5	200	70	2.5
757929175	175:1	20125/34500Y	115	0.15 W,X	1.1	1.25	1000	34.5	200	70	2.5
757929200	200:1	26400/26400Y	115	0.15 W,X	1.1	1.25	1000	34.5	200	70	2.5
757929300	300:1	34500/34500Y	115	0.15 W,X	1.1	1.25	1000	34.5	200	70	2.5
Without FUSE in the secondary box											
757928166	69.25 / 166:1	8310/14393Y & 19920/34500Y	120	0.3 W,X,M,Y	1.1	1.25	1000	34.5	200	70	2.5
757920140	140:1	16800/29098Y	120	0.3 W,X,M,Y	1.1	1.25	1000	34.5	200	70	2.5
757928240	140/240:1	16100/27886Y	115/67.08	0.3 W,X,M,Y	1.1	1.25	1000	34.5	200	70	2.5
757920166	166:1	19920/34500Y	120	0.3 W,X,M,Y	1.1	1.25	1000	34.5	200	70	2.5
757920175	175:1	20125/34857Y	115	0.3 W,X,M,Y	1.1	1.25	1000	34.5	200	70	2.5
757928300	175/300:1	20125/34857Y	115/67.08	0.3 W,X,M,Y	1.1	1.25	1000	34.5	200	70	2.5
757920220	220:1	26400/26400Y	120	0.3 W,X,M,Y,Z	1.1	1.25	1000	34.5	200	70	2.5
757928400	240/400:1	27600/27600Y	115 / 69	0.3 W,X,M,Y	1.1	1.25	1000	34.5	200	70	2.5
757920300	300:1	34500/34500Y	115	0.3 W,X,M,Y,Z	1.1	1.25	1000	34.5	200	70	2.5
757928500	300/500:1	34500/34500Y	115/69	0.3 W,X,M,Y	1.1	1.25	1000	34.5	200	70	2.5

*** For HCEP Option add (–H) to the end of the code number.**
Additional ratings available upon request.

Notes:

VRU-36

34.5 kV VOLTAGE TRANSFORMER

OUTDOOR
60 Hertz

ARTECHE UR/VR series are dry type outdoor service voltage transformers. The core is encapsulated with Type B epoxy resin which provides excellent internal dielectric properties and mechanical strength. The external layer of Cycloaliphatic Epoxy Resin (CEP) provides resistance to ultraviolet rays and the effects of tracking and erosion on the exterior of the transformer ensuring a long mechanical and electrical life. The transformer is maintenance free.

The external layer can be manufactured with Hydrophobic Cycloaliphatic Epoxy Resin (HCEP) which improves service life expectancy due to its improved tracking and erosion resistance. HCEP additionally increases the transformer's weatherability and offers better performance in heavily polluted environments.

The core is built with high permeability grain oriented silicon steel laminations for low losses. The windings are copper wire with copper plate double isolation. The concentric distribution of the coils prevents magnetic flux leakage, achieving greater accuracy and higher capacity to withstand mechanical stresses in adverse operating conditions.

Partial Discharge measurements exceed the IEEE, CAN/CSA and IEC requirements.

Mechanical characteristics

Insulation Material	Colors	Weight (lbs.)	Creepage distance (in)	Strike distance (in)
Resin	Gray*	284	47.5	25.2

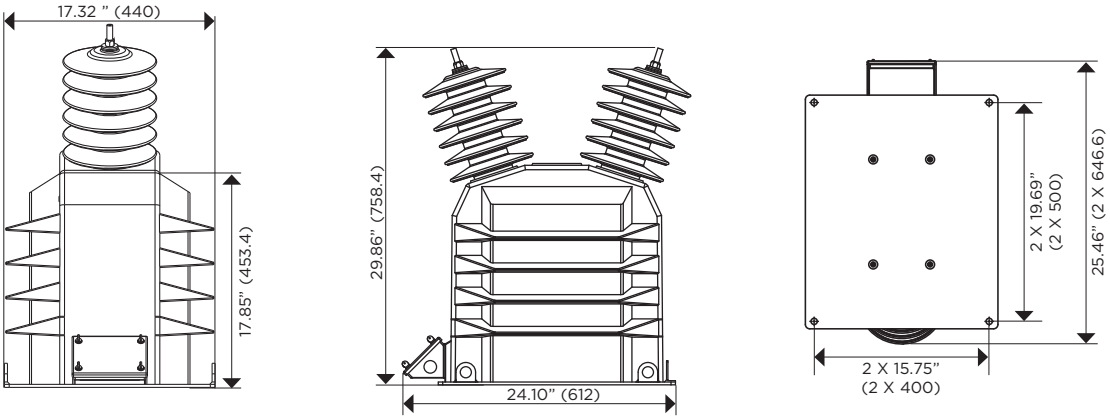

Drawing number: 4288071

CONNECTIONS

PRIMARY TERMINAL	GROUND TERMINAL	SECONDARY TERMINAL

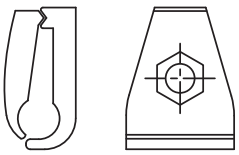

Type: TE-4T
Material: Copper
Range: 8SOL-4TRE

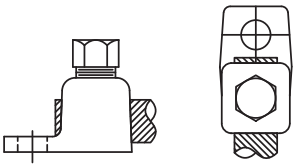

Type: TE-12-250
Material: Copper
Range: 4TRE-250MCM

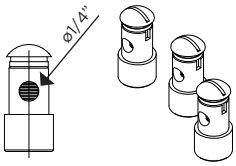

Type: Quick Connector
Material: Brass

MARKING (Single Primary Ratio)

ONE SECONDARY	TWO SECONDARIES	ONE SECONDARY WITH TAP	TWO SECONDARIES WITH TAP

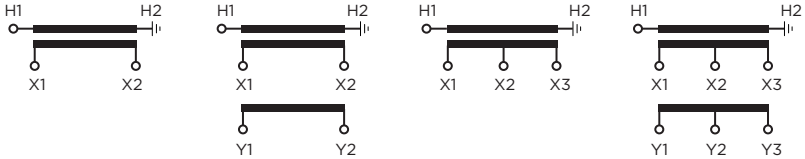

Approximate dimensions in inches (mm). • * Brown color available upon request

VRU-36

34.5 kV VOLTAGE TRANSFORMER

Electrical characteristics

Code * (CEP)	Ratio	Primary (V)	Secondary (V)	IEEE Metering Accuracy	Continuous Rated Voltage Factor (Un)	Rated Voltage Factor 30 s (Un)	Thermal Burden (VA)	Nominal Voltage System (kV)	BIL (kV)	Power-Frequency Withstand Voltage (1 min)	
										Primary & Secondary (kV_{rms})	Secondary Winding (kV_{rms})
757890175	175:1	20125/34857Y	115	0.3 W,X,M,Y,Z,ZZ	1.1	1.25	2500 VA	34.5	200	70	2.5
757892175	175:1-1	20125/34857Y	115 & 115	0.3 W,X,M,Y,Z	1.1	1.25	1250 & 1250 VA	34.5	200	70	2.5
757890200	200:1	23000/23000Y	115	0.3 W,X,M,Y,Z,ZZ	1.1	1.25	2500 VA	34.5	200	70	2.5
757892240	240:1-1	27600/27600Y	115 & 115	0.3 W,X,M,Y,Z	1.1	1.25	1250 & 1250 VA	34.5	200	70	2.5
757892300	300:1-1	34500/34500Y	115 & 115	0.3 W,X,M,Y,Z	1.1	1.25	1250 & 1250 VA	34.5	200	70	2.5
757893300	175/300:1	20125/34857Y	115/67.08	0.3 W,X,M,Y,Z	1.1	1.25	2500 VA	34.5	200	70	2.5
757893500	300/500:1	34500/34500Y	115/69	0.3 W,X,M,Y,Z	1.1	1.25	2500 VA	34.5	200	70	2.5
757896300	175/300:1-1	20125/34857Y	115/67.08 & 115/67.08	0.3 W,X,M,Y,Z	1.1	1.25	1250 & 1250 VA	34.5	200	70	2.5
757893520	175/300 & 300/520:1	20125/34500	115/67.08 & 115/66.36	0.3 W,X,M,Y,Z	1.1	1.25	1000 & 1000 VA	34.5	200	70	2.5

*** For HCEP Option add (–H) to the end of the code number.**
Additional ratings available upon request.

Notes:

URU-52

46 kV VOLTAGE TRANSFORMER

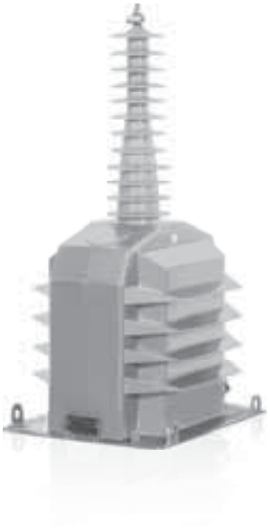

OUTDOOR
60 Hertz

ARTECHE UR/VR series are dry type outdoor service voltage transformers. The core is encapsulated with Type B epoxy resin which provides excellent internal dielectric properties and mechanical strength. The external layer of Cycloaliphatic Epoxy Resin (CEP) provides resistance to ultraviolet rays and the effects of tracking and erosion on the exterior of the transformer ensuring a long mechanical and electrical life. The transformer is maintenance free.

The external layer can be manufactured with Hydrophobic Cycloaliphatic Epoxy Resin (HCEP) which improves service life expectancy due to its improved tracking and erosion resistance. HCEP additionally increases the transformer's weatherability and offers better performance in heavily polluted environments.

The core is built with high permeability grain oriented silicon steel laminations for low losses. The windings are copper wire with copper plate double isolation. The concentric distribution of the coils prevents magnetic flux leakage, achieving greater accuracy and higher capacity to withstand mechanical stresses in adverse operating conditions.

Partial Discharge measurements exceed the IEEE, CAN/CSA and IEC requirements.

Mechanical characteristics

Insulation Material	Colors	Weight (lbs.)	Creepage distance (in)	Strike distance (in)
Resin	Gray*	374	64.56	38.58

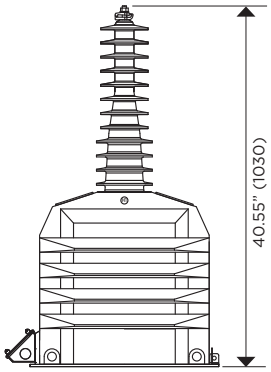

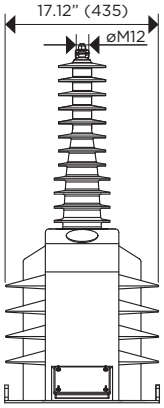

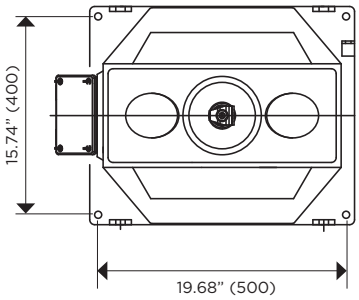

Drawing number: 9449585

CONNECTIONS

PRIMARY TERMINAL

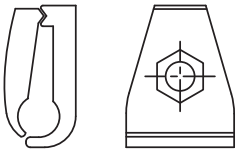

Type: TE-4T
Material: Copper
Range: 8SOL-4TRE

GROUND TERMINAL

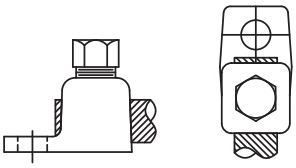

Type: TE-12-250
Material: Copper
Range: 4TRE-250MCM

SECONDARY TERMINAL

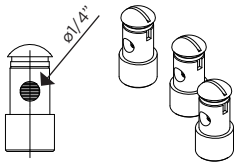

Type: Quick Connector
Material: Brass

MARKING (Single Primary Ratio)

ONE SECONDARY	TWO SECONDARIES	ONE SECONDARY WITH TAP	TWO SECONDARIES WITH TAP

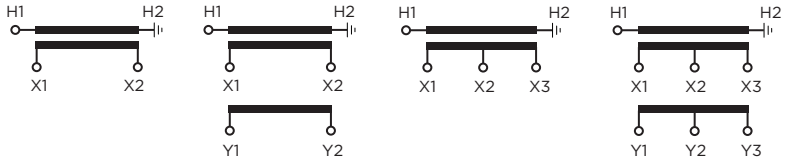

Approximate dimensions in inches (mm). • * Brown color available upon request

URU-52

46 kV VOLTAGE TRANSFORMER

Electrical characteristics

Code * (CEP)	Ratio	Primary (V)	Secondary (V)	IEEE Metering Accuracy	Continuous Rated Voltage Factor (Un)	Rated Voltage Factor 30 s (Un)	Thermal Burden (VA)	Nominal Voltage System (kV)	BIL (kV)	Power-Frequency Withstand Voltage (1 min)	
										Primary & Secondary (kV_{rms})	Secondary Winding (kV_{rms})
757971240	240:1	27600/47804GY	115	0.3 W,X,M,Y,Z,ZZ	1.1	1.73	2500	46	250	95	2.5
757972240	240 & 240:1	27600/47804GY	115 & 115	0.3 W,X,M,Y,Z & 0.3 W,X,M,Y,Z	1.1	1.73	1250 & 1250	46	250	95	2.5
757973400	240/400:1	27600/47804GY	115/69	0.3 W,X,M,Y,Z	1.1	1.73	2500	46	250	95	2.5
757979240	240:1	27600/47804GY	115	0.15 W,X,M,Y,Z	1.1	1.73	2500	46	250	95	2.5
757972400	240/400 & 240/400:1	27600/47804GY	115/69 & 115/69	0.3 W,X,M,Y,Z & 0.3 W,X,M,Y,Z	1.1	1.73	1250 & 1250	46	250	95	2.5

*** For HCEP Option add (–H) to the end of the code number.**
Additional ratings available upon request.

Notes:

VRU-52

46 kV VOLTAGE TRANSFORMER

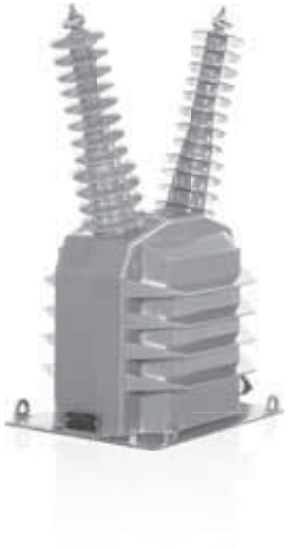

OUTDOOR
60 Hertz

ARTECHE UR/VR series are dry type outdoor service voltage transformers. The core is encapsulated with Type B epoxy resin which provides excellent internal dielectric properties and mechanical strength. The external layer of Cycloaliphatic Epoxy Resin (CEP) provides resistance to ultraviolet rays and the effects of tracking and erosion on the exterior of the transformer ensuring a long mechanical and electrical life. The transformer is maintenance free.

The external layer can be manufactured with Hydrophobic Cycloaliphatic Epoxy Resin (HCEP) which improves service life expectancy due to its improved tracking and erosion resistance. HCEP additionally increases the transformer's weatherability and offers better performance in heavily polluted environments.

The core is built with high permeability grain oriented silicon steel laminations for low losses. The windings are copper wire with copper plate double isolation. The concentric distribution of the coils prevents magnetic flux leakage, achieving greater accuracy and higher capacity to withstand mechanical stresses in adverse operating conditions.

Partial Discharge measurements exceed the IEEE, CAN/CSA and IEC requirements.

Mechanical characteristics

Insulation Material	Colors	Weight (lbs.)	Creepage distance (in)	Strike distance (in)
Resin	Gray*	394	61.41	24

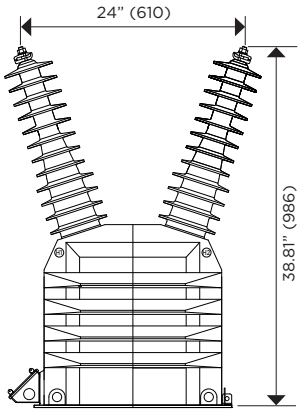

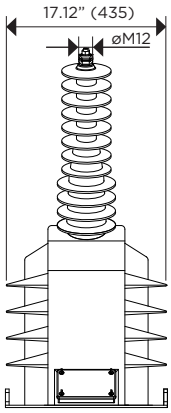

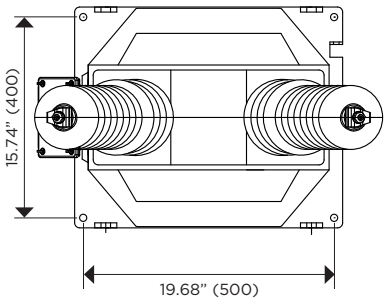

Drawing number: 9449540

CONNECTIONS

PRIMARY TERMINAL	GROUND TERMINAL	SECONDARY TERMINAL
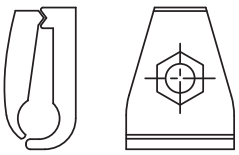	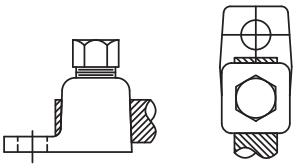	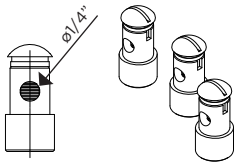
Type: TE-4T Material: Copper Range: 8SOL-4TRE	Type: TE-12-250 Material: Copper Range: 4TRE-250MCM	Type: Quick Connector Material: Brass

MARKING (Single Primary Ratio)

ONE SECONDARY	TWO SECONDARIES	ONE SECONDARY WITH TAP	TWO SECONDARIES WITH TAP
	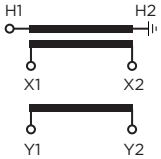	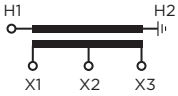	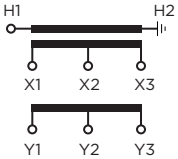

Approximate dimensions in inches (mm). • * Brown color available upon request

VRU-52

46 kV VOLTAGE TRANSFORMER

Electrical characteristics

Code * (CEP)	Ratio	Primary (V)	Secondary (V)	IEEE Metering Accuracy	Continuous Rated Voltage Factor (Un)	Rated Voltage Factor 30 s (Un)	Thermal Burden (VA)	Nominal Voltage System (kV)	BIL (kV)	Power-Frequency Withstand Voltage (1 min)	
										Primary & Secondary (kV_{rms})	Secondary Winding (kV_{rms})
757981240	240:1	27600/47804Y	115	0.3 W,X,M,Y,Z,ZZ	1.1	1.25	3000	46	250	95	2.5
757982240	240 & 240:1	27600/47804Y	115 & 115	0.3 W,X,M,Y,Z & 0.3 W,X,M,Y,Z	1.1	1.25	1500 & 1500	46	250	95	2.5
757983400	240/400:1	27600/47804Y	115/69	0.3 W,X,M,Y,Z	1.1	1.25	3000	46	250	95	2.5
757981400	400:1	46000/46000Y	115	0.3 W,X,M,Y,Z,ZZ	1.1	1.25	3000	46	250	95	2.5
757982400	400 & 400:1	46000/46000Y	115 & 115	0.3 W,X,M,Y,Z & 0.3 W,X,M,Y,Z	1.1	1.25	1500 & 1500	46	250	95	2.5
757983666	400/666.66:1	46000/46000Y	115/69	0.3 W,X,M,Y,Z	1.1	1.25	3000	46	250	95	2.5
757989240	240:1	27600/47804Y	115	0.15 W,X,M,Y,Z	1.1	1.25	3000	46	250	95	2.5
757986400	240/400:1	27600/47804Y	115/69	0.15 W,X,M,Y	1.1	1.25	3000	46	250	95	2.5
757989400	400:1	46000/46000Y	115	0.15 W,X,M,Y,Z	1.1	1.25	3000	46	250	95	2.5

*** For HCEP Option add (–H) to the end of the code number.**
Additional ratings available upon request.

Notes:

URU-72

69 kV VOLTAGE TRANSFORMER

OUTDOOR
60 Hertz

ARTECHE UR/VR series are dry type outdoor service voltage transformers. The core is encapsulated with Type B epoxy resin which provides excellent internal dielectric properties and mechanical strength. The external layer of Cycloaliphatic Epoxy Resin (CEP) provides resistance to ultraviolet rays and the effects of tracking and erosion on the exterior of the transformer ensuring a long mechanical and electrical life. The transformer is maintenance free.

The external layer can be manufactured with Hydrophobic Cycloaliphatic Epoxy Resin (HCEP) which improves service life expectancy due to its improved tracking and erosion resistance. HCEP additionally increases the transformer's weatherability and offers better performance in heavily polluted environments.

The core is built with high permeability grain oriented silicon steel laminations for low losses. The windings are copper wire with copper plate double isolation. The concentric distribution of the coils prevents magnetic flux leakage, achieving greater accuracy and higher capacity to withstand mechanical stresses in adverse operating conditions.

Partial Discharge measurements exceed the IEEE, CAN/CSA and IEC requirements.

Mechanical characteristics

Insulation Material	Colors	Weight (lbs.)	Creepage distance (in)	Strike distance (in)
Resin	Gray*	381.4	92.91	43.3

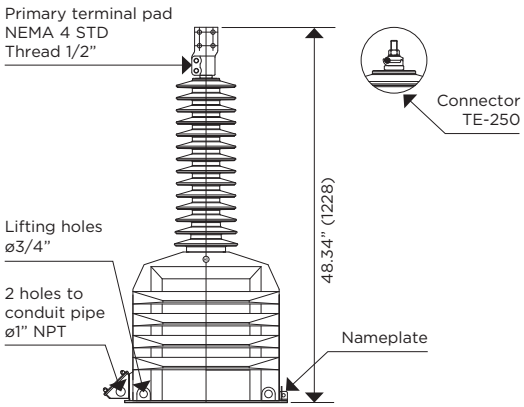

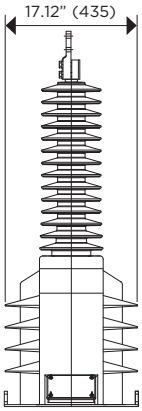

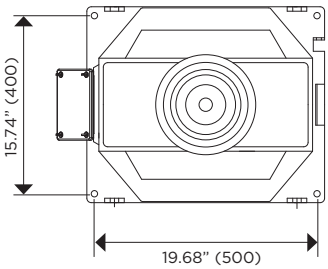

Drawing number: 9449551

CONNECTIONS

PRIMARY TERMINAL

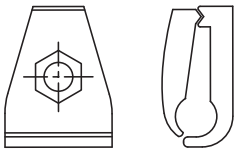

Type: TE-250
Material: Copper
Range: 2/0 TRE-250MCM

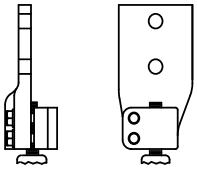

Type: NEMA-2
Material: Copper

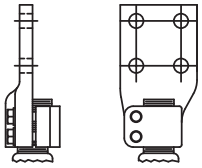

Type: NEMA-4
Material: Copper

GROUND TERMINAL

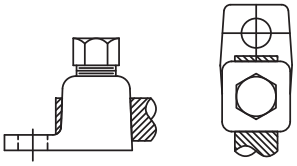

Type: TE-12-250
Material: Copper
Range: 4TRE-250MCM

SECONDARY TERMINAL

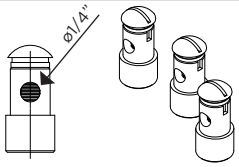

Type: Quick Connector
Material: Brass

MARKING (Single Primary Ratio)

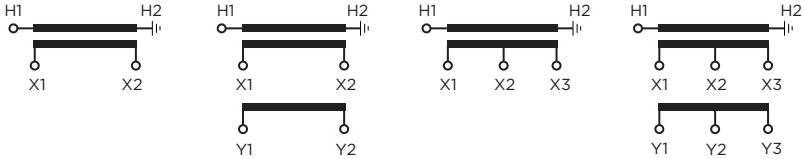

Approximate dimensions in inches (mm). • * Brown color available upon request

URU-72

69 kV VOLTAGE TRANSFORMER

Electrical characteristics

Code * (CEP)	Ratio	Primary (V)	Secondary (V)	IEEE Metering Accuracy	Continuous Rated Voltage Factor (Un)	Rated Voltage Factor 30 s (Un)	Thermal Burden (VA)	Nominal Voltage System (kV)	BIL (kV)	Power-Frequency Withstand Voltage (1 min)	
										Primary & Secondary (kV_{rms})	Secondary Winding (kV_{rms})
757551350	350:1	40250/ 69000GY	115	0.3 W,X,M,Y,ZZ	1.1	1.73	2500	69	350	140	2.5
757553600	350/600:1	40250/ 69000GY	115/67.08	0.3 W,X,M,Y,Z	1.1	1.73	2500	69	350	140	2.5
757552600	350/600 &350/600:1	40250/ 69000GY	115/67.08 & 115/67.08	0.3 W,X,M,Y,Z & 0.3 W,X,M,Y,Z	1.1	1.73	1250 & 1250	69	350	140	2.5

*** For HCEP Option add (–H) to the end of the code number.**
Additional ratings available upon request.

Notes:

VRU-72

69 kV VOLTAGE TRANSFORMER

OUTDOOR
60 Hertz

ARTECHE UR/VR series are dry type outdoor service voltage transformers. The core is encapsulated with Type B epoxy resin which provides excellent internal dielectric properties and mechanical strength. The external layer of Cycloaliphatic Epoxy Resin (CEP) provides resistance to ultraviolet rays and the effects of tracking and erosion on the exterior of the transformer ensuring a long mechanical and electrical life. The transformer is maintenance free.

The external layer can be manufactured with Hydrophobic Cycloaliphatic Epoxy Resin (HCEP) which improves service life expectancy due to its improved tracking and erosion resistance. HCEP additionally increases the transformer's weatherability and offers better performance in heavily polluted environments.

The core is built with high permeability grain oriented silicon steel laminations for low losses. The windings are copper wire with copper plate double isolation. The concentric distribution of the coils prevents magnetic flux leakage, achieving greater accuracy and higher capacity to withstand mechanical stresses in adverse operating conditions.

Partial Discharge measurements exceed the IEEE, CAN/CSA and IEC requirements.

Mechanical characteristics

Insulation Material	Colors	Weight (lbs.)	Creepage distance (in)	Strike distance (in)
Resin	Gray*	455.5	86.5	29

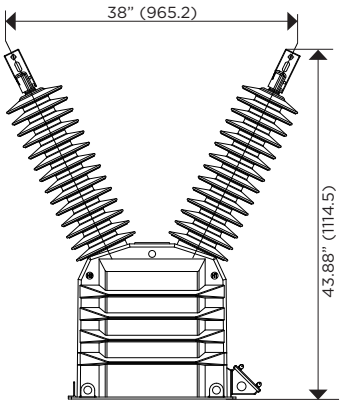

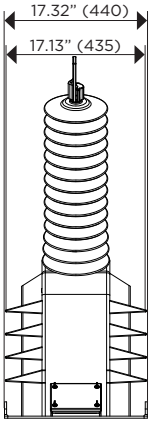

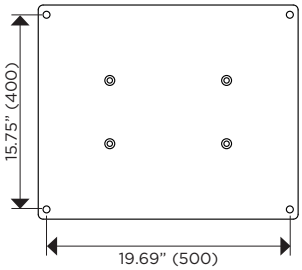

Drawing number: 4287764

CONNECTIONS

PRIMARY TERMINAL

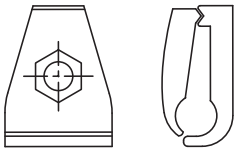

Type: TE-250
Material: Copper
Range: 2/0 TRE-250MCM

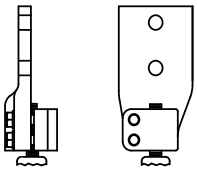

Type: NEMA-2
Material: Copper

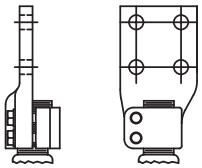

Type: NEMA-4
Material: Copper

GROUND TERMINAL

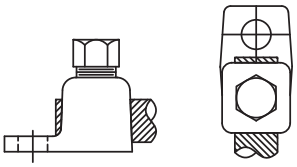

Type: TE-12-250
Material: Copper
Range: 4TRE-250MCM

SECONDARY TERMINAL

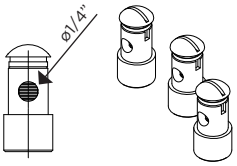

Type: Quick Connector
Material: Brass

MARKING (Single Primary Ratio)

ONE SECONDARY

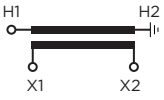

TWO SECONDARIES

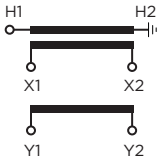

ONE SECONDARY WITH TAP

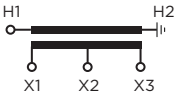

TWO SECONDARIES WITH TAP

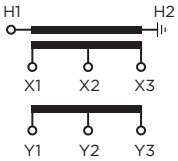

Approximate dimensions in inches (mm). • * Brown color available upon request

VRU-72

69 kV VOLTAGE TRANSFORMER

Electrical characteristics

Code * (CEP)	Ratio	Primary (V)	Secondary (V)	IEEE Metering Accuracy	Continuous Rated Voltage Factor (Un)	Rated Voltage Factor 30 s (Un)	Thermal Burden (VA)	Nominal Voltage System (kV)	BIL (kV)	Power-Frequency Withstand Voltage (1 min)	
										Primary & Secondary (kV_{rms})	Secondary Winding (kV_{rms})
757561600	600:1	69000/69000Y	115	0.3 W,X,M,X,Y,Z,ZZ	1.1	1.73	4000	69	350	140	2.5
757563600	350/600 & 350/600:1	40250/69000Y or 69000/69000Y	197/115 & 115/67.08	0.3 W,X,M,X,Y,Z & 0.3 W,X,M,X,Y,Z	1.1	1.73	2000 & 2000	69	350	140	2.5
757563103	600/1039 & 350/600:1	69000/69000Y	115/66.4 & 197/115	0.3 W,X,M,X,Y,Z & 0.3 W,X,M,X,Y,Z	1.1	1.73	2000 & 2000	69	350	140	2.5
757562600	600 & 600:1	69000/69000Y	115 & 115	0.3 W,X,M,X,Y,Z & 0.3 W,X,M,X,Y,Z	1.1	1.73	2000 & 2000	69	350	140	2.5

*** For HCEP Option add (–H) to the end of the code number.**
Additional ratings available upon request.

Notes:

CRE-7

5 kV CURRENT TRANSFORMER

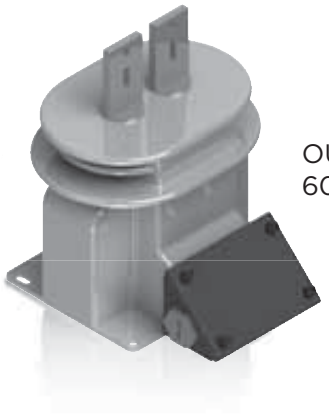

OUTDOOR
60 Hertz

CR Series are dry type outdoor service current transformers. The core is encapsulated with Type B epoxy resin for excellence in internal dielectric properties and mechanical strength. The external layer of Cycloaliphatic resin provides resistance to ultraviolet rays and the effects of tracking and erosion on the exterior of the module. The device is maintenance free, ensuring a long mechanical and electrical life.

The core is built with silicon steel lamination. The blade is high permeability grain oriented Type for low losses. The windings are copper wire with copper plate double isolation. The concentric distribution of the coils prevents magnetic flux leakage, achieving greater accuracy and higher capacity to withstand mechanical stresses in adverse operating conditions.

Partial Discharge measurements exceed IEEE C57.13 2008 requirements.

Mechanical characteristics

Insulation Material	Colors	Weight (lbs.)	Creepage distance (in)	Strike distance (in)
Resin	Gray	43	13.3	3

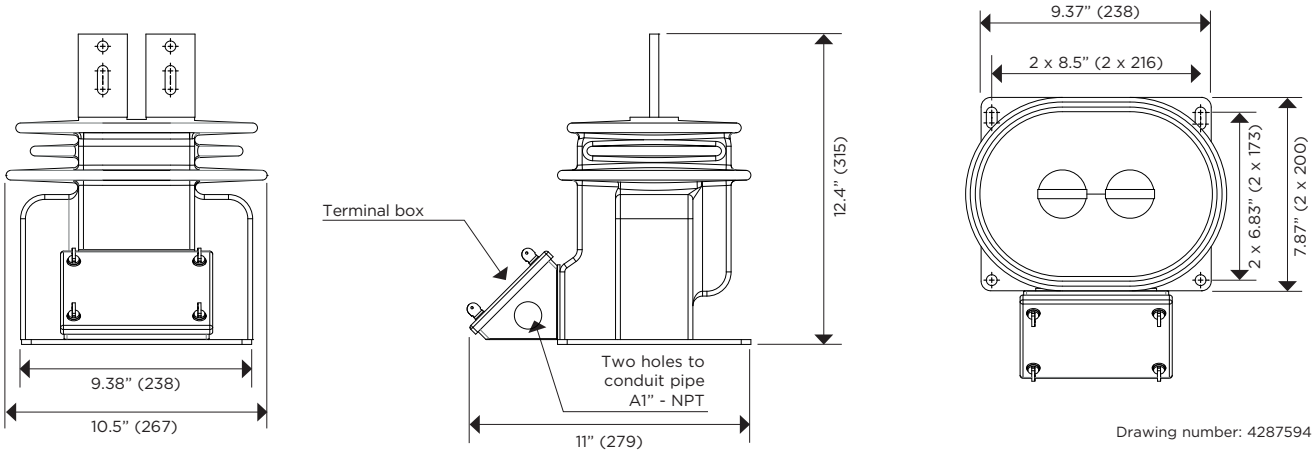

Drawing number: 4287594

CONNECTIONS

PRIMARY TERMINAL

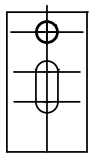

Type: NEMA-2
Material: Copper

GROUND CONNECTOR

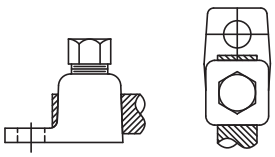

Type: TE-12-250
Material: Copper
Range: 4TRE-250MCM

SECONDARY TERMINAL

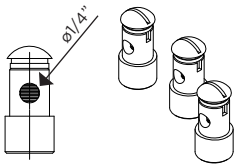

Type: Quick Connector
Material: Brass

MARKING (Single Primary Ratio)

ONE SECONDARY

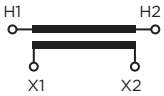

ONE SECONDARY with tap

Approximate dimensions in inches (mm).
* Brown color available upon request

CRE-7

5 kV CURRENT TRANSFORMER

Electrical characteristics

Code * (CEP)	Current Ratio (Primary: Secondary) (A)	Continuous Thermal Current Rating Factor @ 30°C	Short-time Thermal Current (kA/1s)	Short-time Mechanical Current (kA_{peak})	IEEE Metering Accuracy	Relay Accuracy	Highest Nominal Voltage System (kV)	BIL (kV)	Power-Frequency Withstand Voltage (1 min)	
									Primary & Secondary (kV_{rms})	Secondary Winding (kV_{rms})
756311001	5:5	1.5	0.5	1.35	0.3 B1.8	T-100	5	60	19	2.5
756311002	10:5	1.5	1	2.7	0.3 B1.8	T-100	5	60	19	2.5
756311003	15:5	1.5	1.5	4.05	0.3 B1.8	T-100	5	60	19	2.5
756311004	20:5	1.5	2	5.4	0.3 B1.8	T-100	5	60	19	2.5
756311005	25:5	1.5	2.5	6.75	0.3 B1.8	T-100	5	60	19	2.5
756311006	30:5	1.5	3	8.1	0.3 B1.8	T-100	5	60	19	2.5
756311008	40:5	1.5	4	10.8	0.3 B1.8	T-100	5	60	19	2.5
756311010	50:5	1.5	5	13.5	0.3 B1.8	T-100	5	60	19	2.5
756311015	75:5	1.5	7.5	20.25	0.3 B1.8	T-100	5	60	19	2.5
756311020	100:5	1.5	10	27	0.3 B1.8	T-100	5	60	19	2.5
756311030	150:5	1.5	15	40.5	0.3 B1.8	T-100	5	60	19	2.5
756311040	200:5	1.5	20	54	0.3 B1.8	T-100	5	60	19	2.5
756311060	300:5	1.5	30	81	0.3 B1.8	T-100	5	60	19	2.5
756311080	400:5	1.5	40	108	0.3 B1.8	T-100	5	60	19	2.5
756311120	600:5	1.5	60	162	0.3 B1.8	T-100	5	60	19	2.5
756311160	800:5	1.5	80	216	0.3 B1.8	T-100	5	60	19	2.5
756311200	1000:5	1.5	100	270	0.3 B1.8	T-70	5	60	19	2.5

*** For HCEP Option add (–H) to the end of the code number.**
Additional ratings available upon request.

Notes:

CRB-17

15 kV CURRENT TRANSFORMER

OUTDOOR
60 Hertz

ARTECHE CR series are dry type outdoor service current transformers. The core is encapsulated with Type B epoxy resin which provides excellent internal dielectric properties and mechanical strength. The external layer of Cycloaliphatic Epoxy Resin (CEP) provides resistance to ultraviolet rays and the effects of tracking and erosion on the exterior of the transformer ensuring a long mechanical and electrical life. The transformer is maintenance free.

The external layer can be manufactured with Hydrophobic Cycloaliphatic Epoxy Resin (HCEP) which improves service life expectancy due to its improved tracking and erosion resistance. HCEP additionally increases the transformer's weatherability and offers better performance in heavily polluted environments.

The core is built with high permeability grain oriented silicon steel laminations for low losses. The windings are copper wire with copper plate double isolation. The concentric distribution of the coils prevents magnetic flux leakage, achieving greater accuracy and higher capacity to withstand mechanical stresses in adverse operating conditions.

Partial Discharge measurements exceed the IEEE, CAN/CSA and IEC requirements.

Mechanical characteristics

Insulation Material	Colors	Weight (lbs.)	Creepage distance (in)	Strike distance (in)
Resin	Gray*	48.5	16.5	8

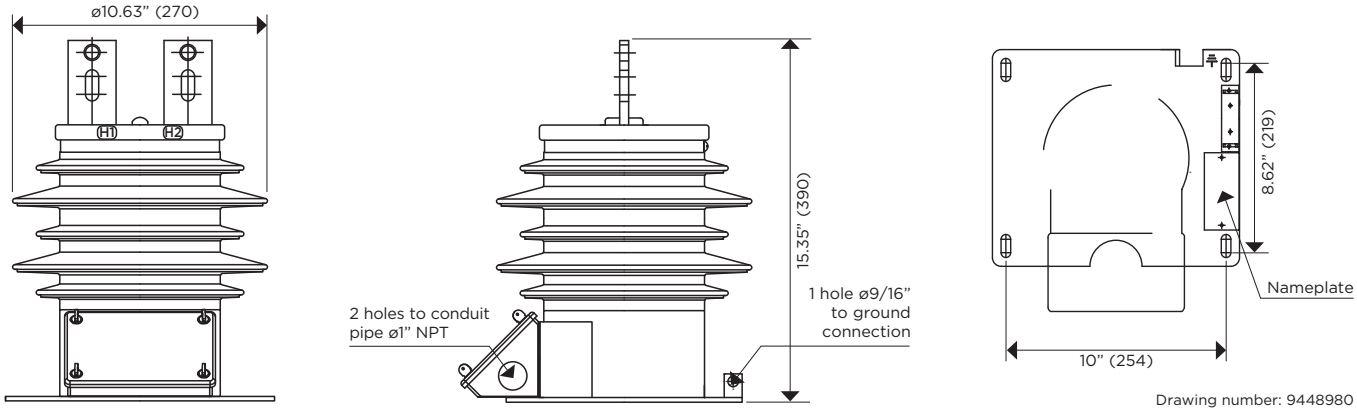

Drawing number: 9448980

CONNECTIONS

PRIMARY TERMINAL

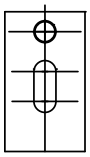

Type: NEMA-2
Material: Copper

GROUND CONNECTOR

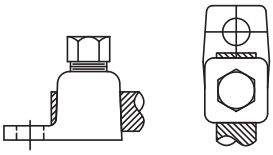

Type: TE-12-250
Material: Copper
Range: 4TRE-250MCM

SECONDARY TERMINAL

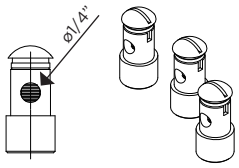

Type: Quick Connector
Material: Brass

MARKING (Single Primary Ratio)

ONE SECONDARY

Approximate dimensions in inches (mm).
* Brown color available upon request

CRB-17

15 kV CURRENT TRANSFORMER

Electrical characteristics										
Code * (CEP)	Current Ratio (Primary: Secondary) (A)	Continuous Thermal Current Rating Factor @ 30°C	Short-time Thermal Current (kA/1s)	Short-time Mechanical Current (kA_{peak})	IEEE Metering Accuracy	Relay Accuracy	Nominal Voltage System (kV)	BIL (kV)	Power-Frequency Withstand Voltage (1 min)	
									Primary & Secondary (kV_{rms})	Secondary Winding (kV_{rms})
756203001	5:5	3.0	0.5	1.25	0.3 B-0.5	-	15	110	34	2.5
756203002	10:5	3.0	1	2.5	0.3 B-0.5	-	15	110	34	2.5
756203003	15:5	3.0	1.5	3.75	0.3 B-0.5	-	15	110	34	2.5
756203004	20:5	3.0	2	5	0.3 B-0.5	-	15	110	34	2.5
756203005	25:5	3.0	2.5	6.25	0.3 B-0.5	-	15	110	34	2.5
756203006	30:5	3.0	3	7.5	0.3 B-0.5	-	15	110	34	2.5
756203008	40:5	3.0	4	10	0.3 B-0.5	-	15	110	34	2.5
756203010	50:5	3.0	5	12.5	0.3 B-0.5	-	15	110	34	2.5
756203015	75:5	3.0	7.5	18.75	0.3 B-0.5	-	15	110	34	2.5
756203020	100:5	3.0	10	25	0.3 B-0.5	-	15	110	34	2.5
756203030	150:5	3.0	15	37.5	0.3 B-0.5	-	15	110	34	2.5
756203040	200:5	3.0	20	50	0.3 B-0.5	-	15	110	34	2.5
756203060	300:5	3.0	30	75	0.3 B-0.5	-	15	110	34	2.5
756203080	400:5	3.0	40	100	0.3 B-0.5	-	15	110	34	2.5
756203120	600:5	2.0	60	150	0.3 B-0.5	-	15	110	34	2.5
756203160	800:5	1.5	60	150	0.3 B-0.5	-	15	110	34	2.5
756203200	1000:5	1.0	75	127.5	0.3 B-0.5	-	15	110	34	2.5
756203240	1200:5	1.0	90	162	0.3 B-0.5	-	15	110	34	2.5
Shorting Link										
756204001	5:5	3.0	0.5	1.25	0.3 B-0.5	-	15	110	34	2.5
756204002	10:5	3.0	1	2.5	0.3 B-0.5	-	15	110	34	2.5
756204003	15:5	3.0	1.5	3.75	0.3 B-0.5	-	15	110	34	2.5
756204004	20:5	3.0	2	5	0.3 B-0.5	-	15	110	34	2.5
756204005	25:5	3.0	2.5	6.25	0.3 B-0.5	-	15	110	34	2.5
756204006	30:5	3.0	3	7.5	0.3 B-0.5	-	15	110	34	2.5
756204008	40:5	3.0	4	10	0.3 B-0.5	-	15	110	34	2.5
756204010	50:5	3.0	5	12.5	0.3 B-0.5	-	15	110	34	2.5
756204015	75:5	3.0	7.5	18.75	0.3 B-0.5	-	15	110	34	2.5
756204020	100:5	3.0	10	25	0.3 B-0.5	-	15	110	34	2.5
756204030	150:5	3.0	15	37.5	0.3 B-0.5	-	15	110	34	2.5
756204040	200:5	3.0	20	50	0.3 B-0.5	-	15	110	34	2.5
756204060	300:5	3.0	30	75	0.3 B-0.5	-	15	110	34	2.5
756204080	400:5	3.0	40	100	0.3 B-0.5	-	15	110	34	2.5
756204120	600:5	2.0	60	150	0.3 B-0.5	-	15	110	34	2.5
756204160	800:5	1.5	60	150	0.3 B-0.5	-	15	110	34	2.5
756204200	1000:5	1.0	75	127.5	0.3 B-0.5	-	15	110	34	2.5
756204240	1200:5	1.0	90	162	0.3 B-0.5	-	15	110	34	2.5

*** For HCEP Option add (–H) to the end of the code number.**
Additional ratings available upon request.

CRB-17

15 kV CURRENT TRANSFORMER

Electrical characteristics

Code * (CEP)	Current Ratio (Primary: Secondary) (A)	Continuous Thermal Current Rating Factor @ 30°C	Short-time Thermal Current (kA/1s)	Short-time Mechanical Current (kA_{peak})	IEEE Metering Accuracy	Relay Accuracy	Nominal Voltage System (kV)	BIL (kV)	Power-Frequency Withstand Voltage (1 min)	
									Primary & Secondary (kV_{rms})	Secondary Winding (kV_{rms})
High Accuracy Extended Range 5% nominal current to Rating Factor										
756207001	5:5	1.5	0.5	1.25	0.15S B-0.5	-	15	110	34	2.5
756207002	10:5	1.5	1	2.5	0.15S B-0.5	-	15	110	34	2.5
756207003	15:5	1.5	1.5	3.75	0.15S B-0.5	-	15	110	34	2.5
756207004	20:5	1.5	2	5	0.15S B-0.5	-	15	110	34	2.5
756207005	25:5	1.5	2.5	6.25	0.15S B-0.5	-	15	110	34	2.5
756207006	30:5	1.5	3	7.5	0.15S B-0.5	-	15	110	34	2.5
756207008	40:5	1.5	4	10	0.15S B-0.5	-	15	110	34	2.5
756207010	50:5	1.5	5	12.5	0.15S B-0.5	-	15	110	34	2.5
756207015	75:5	1.5	7.5	18.75	0.15S B-0.5	-	15	110	34	2.5
756207020	100:5	1.5	10	25	0.15S B-0.5	-	15	110	34	2.5
756207030	150:5	1.5	15	37.5	0.15S B-0.5	-	15	110	34	2.5
756207040	200:5	1.5	20	50	0.15S B-0.5	-	15	110	34	2.5
756207060	300:5	1.5	30	75	0.15S B-0.5	-	15	110	34	2.5
756207080	400:5	1.5	40	100	0.15S B-0.5	-	15	110	34	2.5
756207120	600:5	1.5	60	150	0.15S B-0.5	-	15	110	34	2.5
756207160	800:5	1.2	60	150	0.15S B-0.5	-	15	110	34	2.5
756207200	1000:5	1.0	75	127.5	0.15S B-0.5	-	15	110	34	2.5
756207240	1200:5	1.0	90	162	0.15S B-0.5	-	15	110	34	2.5
High Accuracy Extended Range 1% nominal current to Rating Factor										
756206040	200:5	2.0	20	50	0.15 B-0.5	-	15	110	34	2.5
756206120	600:5	1.5	60	150	0.15 B-0.5	-	15	110	34	2.5
756206200	1000:5	1.5	75	127.5	0.15 B-0.5	-	15	110	34	2.5
756206240	1200:5	1.2	90	162	0.15 B-0.5	-	15	110	34	2.5

*** For HCEP Option add (–H) to the end of the code number.**
Additional ratings available upon request.

CRB-17

15 kV CURRENT TRANSFORMER

Notes:

CRE-17

15 kV CURRENT TRANSFORMER

OUTDOOR
60 Hertz

ARTECHE CR series are dry type outdoor service current transformers. The core is encapsulated with Type B epoxy resin which provides excellent internal dielectric properties and mechanical strength. The external layer of Cycloaliphatic Epoxy Resin (CEP) provides resistance to ultraviolet rays and the effects of tracking and erosion on the exterior of the transformer ensuring a long mechanical and electrical life. The transformer is maintenance free.

The external layer can be manufactured with Hydrophobic Cycloaliphatic Epoxy Resin (HCEP) which improves service life expectancy due to its improved tracking and erosion resistance. HCEP additionally increases the transformer's weatherability and offers better performance in heavily polluted environments.

The core is built with high permeability grain oriented silicon steel laminations for low losses. The windings are copper wire with copper plate double isolation. The concentric distribution of the coils prevents magnetic flux leakage, achieving greater accuracy and higher capacity to withstand mechanical stresses in adverse operating conditions.

Partial Discharge measurements exceed the IEEE, CAN/CSA and IEC requirements.

Mechanical characteristics

Insulation Material	Colors	Weight (lbs.)	Creepage distance (in)	Strike distance (in)
Resin	Gray*	68.3	16.5	8

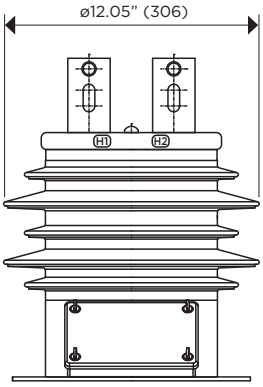

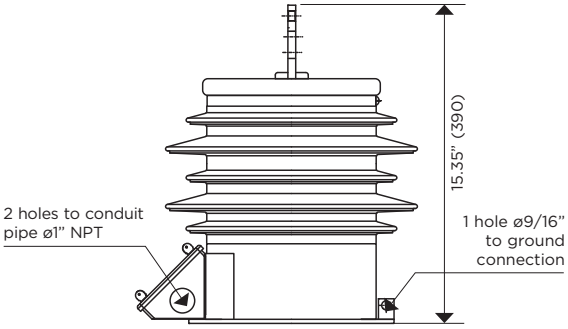

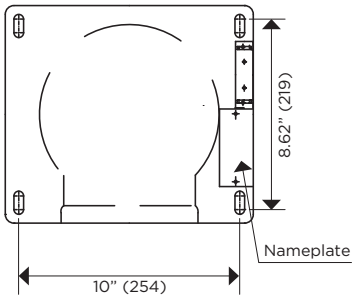

Drawing number: 9448985

CONNECTIONS

PRIMARY TERMINAL

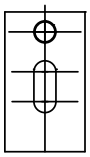

Type: NEMA-2
Material: Copper

GROUND CONNECTOR

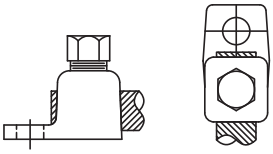

Type: TE-12-250
Material: Copper
Range: 4TRE-250MCM

SECONDARY TERMINAL

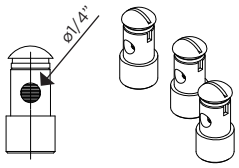

Type: Quick Connector
Material: Brass

MARKING (Single Primary Ratio)

ONE SECONDARY

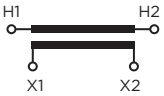

ONE SECONDARY with tap

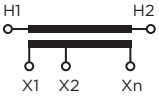

Approximate dimensions in inches (mm).
* Brown color available upon request

CRE-17

15 kV CURRENT TRANSFORMER

Electrical characteristics

Code * (CEP)	Current Ratio (Primary: Secondary) (A)	Continuous Thermal Current Rating Factor @ 30°C	Short-time Thermal Current (kA/1s)	Short-time Mechanical Current (kA_{peak})	IEEE Metering Accuracy	Relay Accuracy	Nominal Voltage System (kV)	BIL (kV)	Power-Frequency Withstand Voltage (1 min)	
									Primary & Secondary (kV_{rms})	Secondary Winding (kV_{rms})
756231001	5:5	1.5	0.5	0.95	0.3 B-1.8	T150	15	110	34	2.5
756231002	10:5	1.5	1	1.9	0.3 B-1.8	T150	15	110	34	2.5
756231003	15:5	1.5	1.5	2.85	0.3 B-1.8	T150	15	110	34	2.5
756231004	20:5	1.5	2	3.8	0.3 B-1.8	T150	15	110	34	2.5
756231005	25:5	1.5	2.5	4.75	0.3 B-1.8	T150	15	110	34	2.5
756231006	30:5	1.5	3	5.7	0.3 B-1.8	T150	15	110	34	2.5
756231008	40:5	1.5	4	7.6	0.3 B-1.8	T150	15	110	34	2.5
756231010	50:5	1.5	5	9.5	0.3 B-1.8	T150	15	110	34	2.5
756231012	60:5	1.5	6	11.4	0.3 B-1.8	T150	15	110	34	2.5
756231015	75:5	1.5	7.5	14.25	0.3 B-1.8	T150	15	110	34	2.5
756231020	100:5	1.5	10	19	0.3 B-1.8	T150	15	110	34	2.5
756231030	150:5	1.5	15	28.5	0.3 B-1.8	T150	15	110	34	2.5
756231040	200:5	1.5	20	38	0.3 B-1.8	T150	15	110	34	2.5
756231060	300:5	1.5	30	57	0.3 B-1.8	T150	15	110	34	2.5
756231080	400:5	1.5	40	76	0.3 B-1.8	T150	15	110	34	2.5
756231120	600:5	1.5	60	86.7	0.3 B-1.8	T150	15	110	34	2.5
756231160	800:5	1.5	60	114	0.3 B-1.8	T150	15	110	34	2.5
756231200	1000:5	1.2	75	142.5	0.3 B-1.8	T150	15	110	34	2.5
756231240	1200:5	1.0	90	171	0.3 B-1.8	T150	15	110	34	2.5
756232002	10/20:5	2.0/1.5	2	3.8	0.3B-0.5/0.3B-1.8	T75/T150	15	110	34	2.5
756232005	25/50:5	2.0/1.5	5	9.5	0.3B-0.5/0.3B-1.8	T75/T150	15	110	34	2.5
756232006	30/60:5	2.0/1.5	6	11.4	0.3B-0.5/0.3B-1.8	T75/T150	15	110	34	2.5
756232010	50/100:5	2.0/1.5	10	19	0.3B-0.5/0.3B-1.8	T75/T150	15	110	34	2.5
756232015	75/150:5	2.0/1.5	15	28.5	0.3B-0.5/0.3B-1.8	T75/T150	15	110	34	2.5
756232020	100/200:5	2.0/1.5	20	38	0.3B-0.5/0.3B-1.8	T75/T150	15	110	34	2.5
756232030	150:300:5	2.0/1.5	30	57	0.3B-0.5/0.3B-1.8	T75/T150	15	110	34	2.5
756232040	200/400:5	2.0/1.5	40	76	0.3B-0.5/0.3B-1.8	T75/T150	15	110	34	2.5
756232060	300/600:5	2.0/1.5	60	86.7	0.3B-0.5/0.3B-1.8	T75/T150	15	110	34	2.5
756232080	400/800:5	1.2/1.2	60	114	0.3B-0.5/0.3B-1.8	T75/T150	15	110	34	2.5
756232100	500/1000:5	1.0/1.0	75	142.5	0.3B-0.5/0.3B-1.8	T75/T150	15	110	34	2.5
756232120	600/1200:5	1.0/1.0	90	171	0.3B-0.5/0.3B-1.8	T75/T150	15	110	34	2.5
756239001	5:5	1.5	0.5	0.95	0.15B-0.9	-	15	110	34	2.5
756239002	10:5	1.5	1	1.9	0.15B-0.9	-	15	110	34	2.5
756239010	50:5	1.5	5	9.5	0.15B-0.9	-	15	110	34	2.5
756239015	75:5	1.5	7.5	14.25	0.15B-0.9	-	15	110	34	2.5
756239020	100:5	1.5	10	19	0.15B-0.9	-	15	110	34	2.5
756239120	600:5	1.5	60	86.7	0.15B-0.9	-	15	110	34	2.5
756239160	800:5	1.5	60	114	0.15B-0.9	-	15	110	34	2.5
756239200	1000:5	1.2	75	142.5	0.15B-0.9	-	15	110	34	2.5
756239240	1200:5	1.0	90	171	0.15B-0.9	-	15	110	34	2.5
756238001	5/10:5	2.0/1.5	1	1.9	0.15B-0.5/0.15B0.09	-	15	110	34	2.5
756238002	10/20:5	2.0/1.5	2	3.8	0.15B-0.5/0.15B0.09	-	15	110	34	2.5
756238060	300/600:5	2.0/1.5	60	86.7	0.15B-0.5/0.15B0.09	-	15	110	34	2.5
756238080	400/800:5	1.2/1.2	60	114	0.15B-0.5/0.15B0.09	-	15	110	34	2.5
756238100	500/1000:5	1.0/1.0	75	142.5	0.15B-0.5/0.15B0.09	-	15	110	34	2.5
756238120	600/1200:5	1.0/1.0	90	171	0.15B-0.5/0.15B0.09	-	15	110	34	2.5

CRE-17

15 kV CURRENT TRANSFORMER

Electrical characteristics

Code * (CEP)	Current Ratio (Primary: Secondary) (A)	Continuous Thermal Current Rating Factor @ 30°C	Short-time Thermal Current (kA/1s)	Short-time Mechanical Current (kA_{peak})	IEEE Metering Accuracy	Relay Accuracy	Nominal Voltage System (kV)	BIL (kV)	Power-Frequency Withstand Voltage (1 min)	
									Primary & Secondary (kV_{rms})	Secondary Winding (kV_{rms})
Shorting Link										
756234001	5:5	1.5	0.5	0.95	0.3 B-1.8	T150	15	110	34	2.5
756234002	10:5	1.5	1	1.9	0.3 B-1.8	T150	15	110	34	2.5
756234003	15:5	1.5	1.5	2.85	0.3 B-1.8	T150	15	110	34	2.5
756234004	20:5	1.5	2	3.8	0.3 B-1.8	T150	15	110	34	2.5
756234005	25:5	1.5	2.5	4.75	0.3 B-1.8	T150	15	110	34	2.5
756234006	30:5	1.5	3	5.7	0.3 B-1.8	T150	15	110	34	2.5
756234008	40:5	1.5	4	7.6	0.3 B-1.8	T150	15	110	34	2.5
756234010	50:5	1.5	5	9.5	0.3 B-1.8	T150	15	110	34	2.5
756234012	60:5	1.5	6	11.4	0.3 B-1.8	T150	15	110	34	2.5
756234015	75:5	1.5	7.5	14.25	0.3 B-1.8	T150	15	110	34	2.5
756234020	100:5	1.5	10	19	0.3 B-1.8	T150	15	110	34	2.5
756234030	150:5	1.5	15	28.5	0.3 B-1.8	T150	15	110	34	2.5
756234040	200:5	1.5	20	38	0.3 B-1.8	T150	15	110	34	2.5
756234060	300:5	1.5	30	57	0.3 B-1.8	T150	15	110	34	2.5
756234080	400:5	1.5	40	76	0.3 B-1.8	T150	15	110	34	2.5
756234120	600:5	1.5	60	86.7	0.3 B-1.8	T150	15	110	34	2.5
756234160	800:5	1.5	60	114	0.3 B-1.8	T150	15	110	34	2.5
756234200	1000:5	1.2	75	142.5	0.3 B-1.8	T150	15	110	34	2.5
756234240	1200:5	1.0	90	171	0.3 B-1.8	T150	15	110	34	2.5
High Accuracy Extended Range 5% nominal current to Rating Factor										
756237001	5:5	1.5	0.5	0.95	0.15S B-0.9	-	15	110	34	2.5
756237002	10:5	1.5	1	1.9	0.15S B-0.9	-	15	110	34	2.5
756237010	50:5	1.5	5	9.5	0.15S B-0.9	-	15	110	34	2.5
756237015	75:5	1.5	7.5	14.25	0.15S B-0.9	-	15	110	34	2.5
756237020	100:5	1.5	10	19	0.15S B-0.9	-	15	110	34	2.5
756237040	200:5	1.5	20	38	0.15S B-0.9	-	15	110	34	2.5
756237060	300:5	1.5	30	57	0.15S B-0.9	-	15	110	34	2.5
756237120	600:5	1.5	60	86.7	0.15S B-0.9	-	15	110	34	2.5
756237160	800:5	1.5	60	114	0.15S B-0.9	-	15	110	34	2.5
756237200	1000:5	1.2	75	142.5	0.15S B-0.9	-	15	110	34	2.5
756237240	1200:5	1.0	90	171	0.15S B-0.9	-	15	110	34	2.5
High Accuracy Extended Range 1% nominal current to Rating Factor										
756236040	200:5	2.0	20	38	0.15 B-1.8	-	15	110	34	2.5
756236120	600:5	1.5	60	86.7	0.15 B-1.8	-	15	110	34	2.5
756236200	1000:5	1.5	75	142.5	0.15 B-1.8	-	15	110	34	2.5
756236240	1200:5	1.2	90	171	0.15 B-1.8	-	15	110	34	2.5

*** For HCEP Option add (–H) to the end of the code number.**
Additional ratings available upon request.

CRE-17

15 kV CURRENT TRANSFORMER

Notes:

CRF-17

15 kV CURRENT TRANSFORMER

OUTDOOR
60 Hertz

ARTECHE CR series are dry type outdoor service current transformers. The core is encapsulated with Type B epoxy resin which provides excellent internal dielectric properties and mechanical strength. The external layer of Cycloaliphatic Epoxy Resin (CEP) provides resistance to ultraviolet rays and the effects of tracking and erosion on the exterior of the transformer ensuring a long mechanical and electrical life. The transformer is maintenance free.

The external layer can be manufactured with Hydrophobic Cycloaliphatic Epoxy Resin (HCEP) which improves service life expectancy due to its improved tracking and erosion resistance. HCEP additionally increases the transformer's weatherability and offers better performance in heavily polluted environments.

The core is built with high permeability grain oriented silicon steel laminations for low losses. The windings are copper wire with copper plate double isolation. The concentric distribution of the coils prevents magnetic flux leakage, achieving greater accuracy and higher capacity to withstand mechanical stresses in adverse operating conditions.

Partial Discharge measurements exceed the IEEE, CAN/CSA and IEC requirements.

Mechanical characteristics

Insulation Material	Colors	Weight (lbs.)	Creepage distance (in)	Strike distance (in)
Resin	Gray*	112.4	27.55	12

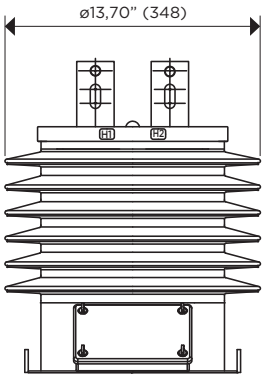

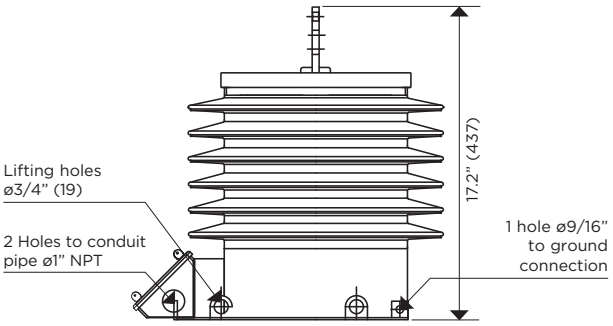

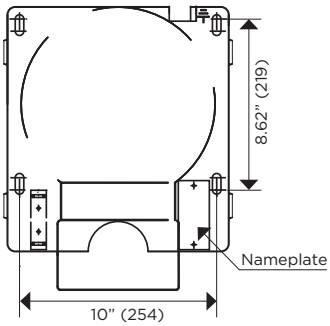

Drawing number: 4286582/4287310**

CONNECTIONS

PRIMARY TERMINAL

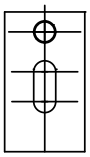

Type: NEMA-2
Material: Copper

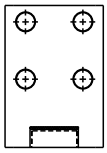

Type: NEMA-4
Material: Copper
**

GROUND CONNECTOR

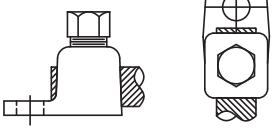

Type: TE-12-250
Material: Copper
Range: 4TRE-250MCM

SECONDARY TERMINAL

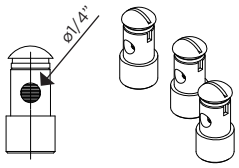

Type: Quick Connector
Material: Brass

MARKING (Single Primary Ratio)

ONE SECONDARY

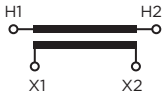

ONE SECONDARY with tap

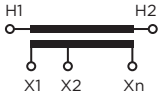

Approximate dimensions in inches (mm).
* Brown color available upon request

CRF-17

15 kV CURRENT TRANSFORMER

Electrical characteristics

Code * (CEP)	Current Ratio (Primary: Secondary) (A)	Continuous Thermal Current Rating Factor @ 30°C	Short-time Thermal Current (kA/1s)	Short-time Mechanical Current (kA_{peak})	IEEE Metering Accuracy	Relay Accuracy	Nominal Voltage System (kV)	BIL (kV)	Power-Frequency Withstand Voltage (1 min)	
									Primary & Secondary (kV_{rms})	Secondary Winding (kV_{rms})
756191001	5:5	1.5	0.5	0.95	0.3B-1.8	T200	15	110	34	2.5
756191002	10:5	1.5	1	1.9	0.3B-1.8	T200	15	110	34	2.5
756191003	15:5	1.5	1.5	2.85	0.3B-1.8	T200	15	110	34	2.5
756191004	20:5	1.5	2	3.8	0.3B-1.8	T200	15	110	34	2.5
756191005	25:5	1.5	2.5	4.75	0.3B-1.8	T200	15	110	34	2.5
756191006	30:5	1.5	3	5.7	0.3B-1.8	T200	15	110	34	2.5
756191008	40:5	1.5	4	7.6	0.3B-1.8	T200	15	110	34	2.5
756191010	50:5	1.5	5	9.5	0.3B-1.8	T200	15	110	34	2.5
756191012	60:5	1.5	6	11.4	0.3B-1.8	T200	15	110	34	2.5
756191015	75:5	1.5	7.5	14.25	0.3B-1.8	T200	15	110	34	2.5
756191020	100:5	1.5	10	19	0.3B-1.8	T200	15	110	34	2.5
756191030	150:5	1.5	15	37.5	0.3B-1.8	T200	15	110	34	2.5
756191040	200:5	1.5	20	50	0.3B-1.8	T200	15	110	34	2.5
756191060	300:5	1.5	30	75	0.3B-1.8	T200	15	110	34	2.5
756191080	400:5	1.5	40	100	0.3B-1.8	T200	15	110	34	2.5
756191120	600:5	1.5	60	86.7	0.3B-1.8	T200	15	110	34	2.5
756191160	800:5	1.2	60	114	0.3B-1.8	T200	15	110	34	2.5
756191200	1000:5	1.0	75	142.5	0.3B-1.8	T200	15	110	34	2.5
756191240	1200:5	1.0	90	171	0.3B-1.8	T200	15	110	34	2.5
756192001	5/10:5	2.0/1.5	1	1.9	0.3B-0.9/0.3B-1.8	T100/200	15	110	34	2.5
756192002	10/20:5	2.0/1.5	2	3.8	0.3B-0.9/0.3B-1.8	T100/200	15	110	34	2.5
756192005	25/50:5	2.0/1.5	5	9.5	0.3B-0.9/0.3B-1.8	T100/200	15	110	34	2.5
756192006	30/60:5	2.0/1.5	6	11.4	0.3B-0.9/0.3B-1.8	T100/200	15	110	34	2.5
756192010	50/100:5	2.0/1.5	10	19	0.3B-0.9/0.3B-1.8	T100/200	15	110	34	2.5
756192015	75/150:5	2.0/1.5	15	28.5	0.3B-0.9/0.3B-1.8	T100/200	15	110	34	2.5
756192020	100/200:5	2.0/1.5	20	38	0.3B-0.9/0.3B-1.8	T100/200	15	110	34	2.5
756192030	150/300:5	2.0/1.5	30	57	0.3B-0.9/0.3B-1.8	T100/200	15	110	34	2.5
756192040	200/400:5	2.0/1.5	40	76	0.3B-0.9/0.3B-1.8	T100/200	15	110	34	2.5
756192060	300/600:5	2.0/1.5	60	86.7	0.3B-0.9/0.3B-1.8	T100/200	15	110	34	2.5
756192080	400/800:5	1.2/1.2	60	114	0.3B-0.9/0.3B-1.8	T100/200	15	110	34	2.5
756192100	500/1000:5	1.0/1.0	75	142.5	0.3B-0.9/0.3B-1.8	T100/200	15	110	34	2.5
756192120	600/1200:5	1.0/1.0	90	171	0.3B-0.9/0.3B-1.8	T100/200	15	110	34	2.5
756199001	5:5	1.5	0.5	0.95	0.15B-0.9	-	15	110	34	2.5
756199002	10:5	1.5	1	1.9	0.15B-0.9	-	15	110	34	2.5
756199010	50:5	1.5	5	9.5	0.15B-0.9	-	15	110	34	2.5
756199015	75:5	1.5	7.5	14.25	0.15B-0.9	-	15	110	34	2.5
756199040	100:5	1.5	10	19	0.15B-0.9	-	15	110	34	2.5
756199120	600:5	1.5	10	19	0.15B-0.9	-	15	110	34	2.5
756199160	800:5	1.2	60	86.7	0.15B-0.9	-	15	110	34	2.5
756199200	1000:5	1.0	60	114	0.15B-0.9	-	15	110	34	2.5
756199240	1200:5	1.0	90	171	0.15B-0.9	-	15	110	34	2.5
756198001	5/10:5	2.0/1.5	1	1.9	0.15B-0.5/0.15B-0.9	-	15	110	34	2.5
756198002	10/20:5	2.0/1.5	2	3.8	0.15B-0.5/0.15B-0.9	-	15	110	34	2.5
756198060	300/600:5	2.0/1.5	60	86.7	0.15B-0.5/0.15B-0.9	-	15	110	34	2.5
756198080	400/800:5	1.2/1.2	60	114	0.15B-0.5/0.15B-0.9	-	15	110	34	2.5
756198100	500/1000:5	1.0/1.0	75	142.5	0.15B-0.5/0.15B-0.9	-	15	110	34	2.5
756198120	600/1200:5	1.0/1.0	90	171	0.15B-0.5/0.15B-0.9	-	15	110	34	2.5

CRF-17

15 kV CURRENT TRANSFORMER

Electrical characteristics

Code * (CEP)	Current Ratio (Primary: Secondary) (A)	Continuous Thermal Current Rating Factor @ 30°C	Short-time Thermal Current (kA/1s)	Short-time Mechanical Current (kA_{peak})	IEEE Metering Accuracy	Relay Accuracy	Nominal Voltage System (kV)	BIL (kV)	Power-Frequency Withstand Voltage (1 min)	
									Primary & Secondary (kV_{rms})	Secondary Winding (kV_{rms})
High Accuracy Extended Range 5% nominal current to Rating Factor										
756197001	5:5	2.0	0.5	0.95	0.15S B-0.5	-	15	110	34	2.5
756197002	10:5	2.0	1	1.9	0.15S B-0.5	-	15	110	34	2.5
756197010	50:5	2.0	5	9.5	0.15S B-0.5	-	15	110	34	2.5
756197015	75:5	2.0	7.5	14.25	0.15S B-0.5	-	15	110	34	2.5
756197100	100:5	2.0	10	19	0.15S B-0.5	-	15	110	34	2.5
756197120	600:5	2.0	10	19	0.15S B-0.5	-	15	110	34	2.5
756197160	800:5	1.5	60	86.7	0.15S B-0.9	-	15	110	34	2.5
756197200	1000:5	1.2	60	114	0.15S B-0.9	-	15	110	34	2.5
756197240	1200:5	1.2	90	171	0.15S B-0.9	-	15	110	34	2.5
High Accuracy Extended Range 1% nominal current to Rating Factor										
756196040	200:5	4.0	10	19	0.15 B-1.8	-	15	110	34	2.5
756196120	600:5	3.0	10	19	0.15 B-1.8	-	15	110	34	2.5
756196200	1000:5	2.0	60	114	0.15 B-1.8	-	15	110	34	2.5
756196240	1200:5	1.5	90	171	0.15 B-1.8	-	15	110	34	2.5

*** For HCEP Option add (–H) to the end of the code number.**
Additional ratings available upon request.

CRF-17

15 kV CURRENT TRANSFORMER

Notes:

CRE-24

25 kV CURRENT TRANSFORMER

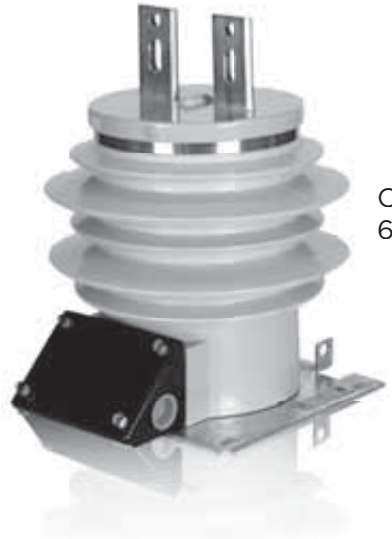

OUTDOOR
60 Hertz

ARTECHE CR series are dry type outdoor service current transformers. The core is encapsulated with Type B epoxy resin which provides excellent internal dielectric properties and mechanical strength. The external layer of Cycloaliphatic Epoxy Resin (CEP) provides resistance to ultraviolet rays and the effects of tracking and erosion on the exterior of the transformer ensuring a long mechanical and electrical life. The transformer is maintenance free.

The external layer can be manufactured with Hydrophobic Cycloaliphatic Epoxy Resin (HCEP) which improves service life expectancy due to its improved tracking and erosion resistance. HCEP additionally increases the transformer's weatherability and offers better performance in heavily polluted environments.

The core is built with high permeability grain oriented silicon steel laminations for low losses. The windings are copper wire with copper plate double isolation. The concentric distribution of the coils prevents magnetic flux leakage, achieving greater accuracy and higher capacity to withstand mechanical stresses in adverse operating conditions.

Partial Discharge measurements exceed the IEEE, CAN/CSA and IEC requirements.

Mechanical characteristics

Insulation Material	Colors	Weight (lbs.)	Creepage distance (in)	Strike distance (in)
Resin	Gray*	78.2	24.4	10

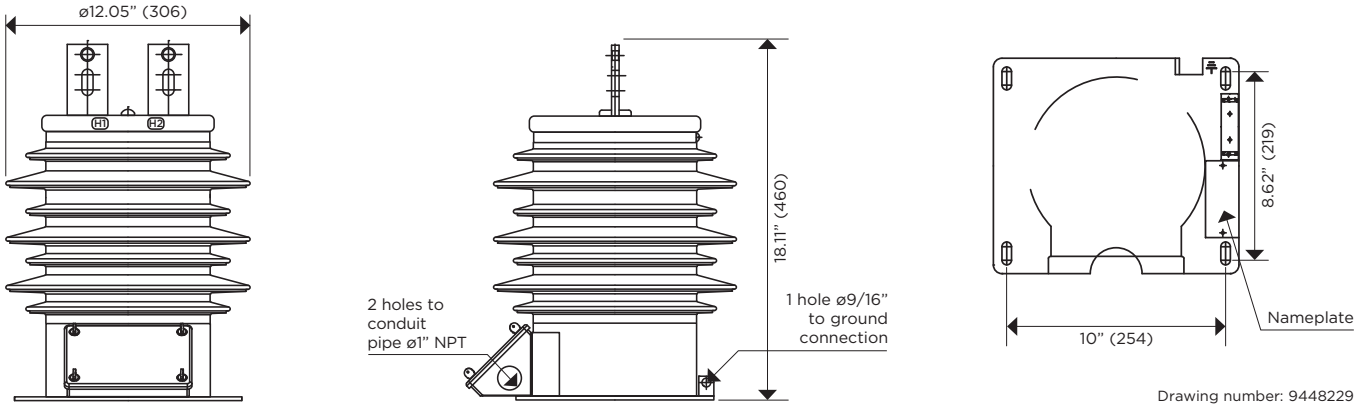

Drawing number: 9448229

CONNECTIONS

PRIMARY TERMINAL	GROUND CONNECTOR	SECONDARY TERMINAL
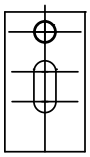	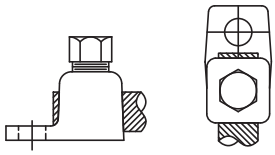	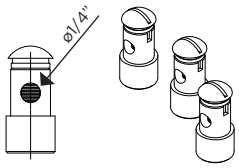
Type: NEMA-2 Material: Copper	Type: TE-12-250 Material: Copper Range: 4TRE-250MCM	Type: Quick Connector Material: Brass

MARKING (Single Primary Ratio)

ONE SECONDARY

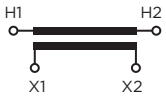

Approximate dimensions in inches (mm).
* Brown color available upon request

CRE-24

25 kV CURRENT TRANSFORMER

Electrical characteristics

Code * (CEP)	Current Ratio (Primary: Secondary) (A)	Continuous Thermal Current Rating Factor @ 30°C	Short-time Thermal Current (kA/1s)	Short-time Mechanical Current (kA_{peak})	IEEE Metering Accuracy	Relay Accuracy	Nominal Voltage System (kV)	BIL (kV)	Power-Frequency Withstand Voltage (1 min)	
									Primary & Secondary (kV_{rms})	Secondary Winding (kV_{rms})
756243001	5:5	3.0	0.5	1.25	0.3B-0.9	T60	25	150	50	2.5
756243002	10:5	3.0	1	2.5	0.3B-0.9	T60	25	150	50	2.5
756243003	15:5	3.0	1.5	3.75	0.3B-0.9	T60	25	150	50	2.5
756243004	20:5	3.0	2	5	0.3B-0.9	T60	25	150	50	2.5
756243005	25:5	3.0	2.5	6.25	0.3B-0.9	T60	25	150	50	2.5
756243006	30:5	3.0	3	7.5	0.3B-0.9	T60	25	150	50	2.5
756243008	40:5	3.0	4	10	0.3B-0.9	T60	25	150	50	2.5
756243010	50:5	3.0	5	12.5	0.3B-0.9	T60	25	150	50	2.5
756243015	75:5	3.0	7.5	18.75	0.3B-0.9	T60	25	150	50	2.5
756243020	100:5	3.0	10	25	0.3B-0.9	T60	25	150	50	2.5
756243030	150:5	3.0	15	37.5	0.3B-0.9	T60	25	150	50	2.5
756243040	200:5	3.0	20	50	0.3B-0.9	T60	25	150	50	2.5
756243060	300:5	3.0	30	75	0.3B-0.9	T60	25	150	50	2.5
756243080	400:5	3.0	40	100	0.3B-0.9	T60	25	150	50	2.5
756243120	600:5	2.0	60	150	0.3B-0.9	T60	25	150	50	2.5
756243160	800:5	1.5	60	150	0.3B-0.9	T60	25	150	50	2.5
756243200	1000:5	1.0	75	127.5	0.3B-0.9	T60	25	150	50	2.5
756243240	1200:5	1.0	90	162	0.3B-0.9	T60	25	150	50	2.5
High Accuracy Extended Range 1% nominal current to Rating Factor										
756246040	200:5	2.0	20	50	0.15 B-1.8	-	25	150	50	2.5
756246120	600:5	1.5	60	150	0.15 B-1.8	-	25	150	50	2.5
756246200	1000:5	1.5	75	127.5	0.15 B-1.8	-	25	150	50	2.5
756246240	1200:5	1.2	90	162	0.15 B-1.8	-	25	150	50	2.5

*** For HCEP Option add (–H) to the end of the code number.**
Additional ratings available upon request.

Notes:

CRF-24

25 kV CURRENT TRANSFORMER

OUTDOOR
60 Hertz

ARTECHE CR series are dry type outdoor service current transformers. The core is encapsulated with Type B epoxy resin which provides excellent internal dielectric properties and mechanical strength. The external layer of Cycloaliphatic Epoxy Resin (CEP) provides resistance to ultraviolet rays and the effects of tracking and erosion on the exterior of the transformer ensuring a long mechanical and electrical life. The transformer is maintenance free.

The external layer can be manufactured with Hydrophobic Cycloaliphatic Epoxy Resin (HCEP) which improves service life expectancy due to its improved tracking and erosion resistance. HCEP additionally increases the transformer's weatherability and offers better performance in heavily polluted environments.

The core is built with high permeability grain oriented silicon steel laminations for low losses. The windings are copper wire with copper plate double isolation. The concentric distribution of the coils prevents magnetic flux leakage, achieving greater accuracy and higher capacity to withstand mechanical stresses in adverse operating conditions.

Partial Discharge measurements exceed the IEEE, CAN/CSA and IEC requirements.

Mechanical characteristics

Insulation Material	Colors	Weight (lbs.)	Creepage distance (in)	Strike distance (in)
Resin	Gray*	112.4	27.55	12

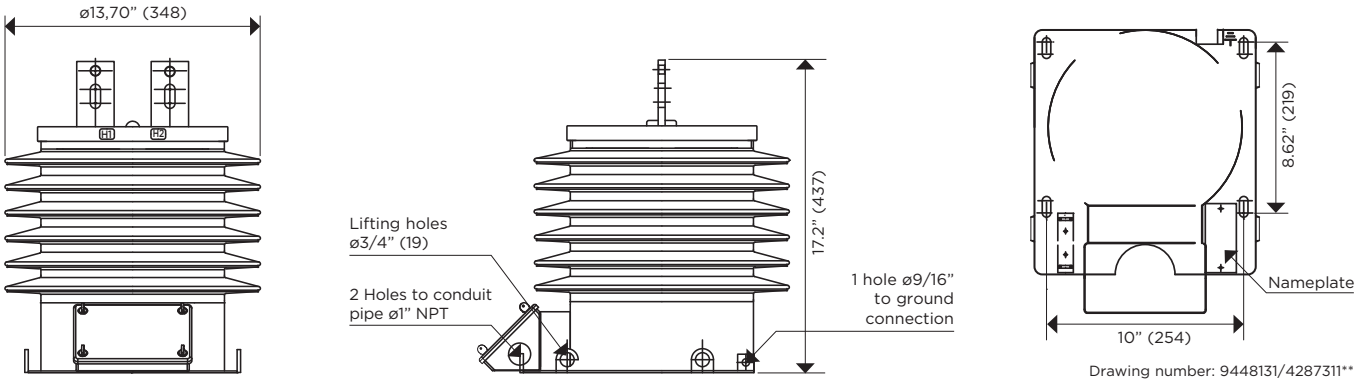

Drawing number: 9448131/4287311**

CONNECTIONS

PRIMARY TERMINAL

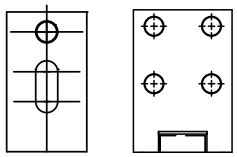

Type: NEMA-2
Material: Copper

Type: NEMA-4
Material: Copper
**

GROUND CONNECTOR

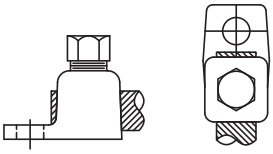

Type: TE-12-250
Material: Copper
Range: 4TRE-250MCM

SECONDARY TERMINAL

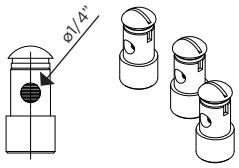

Type: Quick Connector
Material: Brass

MARKING (Single Primary Ratio)

ONE SECONDARY

ONE SECONDARY with tap

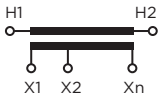

Approximate dimensions in inches (mm).
* Brown color available upon request

CRF-24

25 kV CURRENT TRANSFORMER

Electrical characteristics

Code * (CEP)	Current Ratio (Primary: Secondary) (A)	Continuous Thermal Current Rating Factor @ 30°C	Short-time Thermal Current (kA/1s)	Short-time Mechanical Current (kA_{peak})	IEEE Metering Accuracy	Relay Accuracy	Nominal Voltage System (kV)	BIL (kV)	Power-Frequency Withstand Voltage (1 min)	
									Primary & Secondary (kV_{rms})	Secondary Winding (kV_{rms})
756261001	5:5	1.5	0.5	0.95	0.3B-1.8	T200	25	150	50	2.5
756261002	10:5	1.5	1	1.9	0.3B-1.8	T200	25	150	50	2.5
756261003	15:5	1.5	1.5	2.85	0.3B-1.8	T200	25	150	50	2.5
756261004	20:5	1.5	2	3.8	0.3B-1.8	T200	25	150	50	2.5
756261005	25:5	1.5	2.5	4.75	0.3B-1.8	T200	25	150	50	2.5
756261006	30:5	1.5	3	5.7	0.3B-1.8	T200	25	150	50	2.5
756261008	40:5	1.5	4	7.6	0.3B-1.8	T200	25	150	50	2.5
756261010	50:5	1.5	5	9.5	0.3B-1.8	T200	25	150	50	2.5
756261012	60:5	1.5	6	11.4	0.3B-1.8	T200	25	150	50	2.5
756261015	75:5	1.5	7.5	14.25	0.3B-1.8	T200	25	150	50	2.5
756261020	100:5	1.5	10	19	0.3B-1.8	T200	25	150	50	2.5
756261030	150:5	1.5	15	37.5	0.3B-1.8	T200	25	150	50	2.5
756261040	200:5	1.5	20	50	0.3B-1.8	T200	25	150	50	2.5
756261060	300:5	1.5	30	75	0.3B-1.8	T200	25	150	50	2.5
756261080	400:5	1.5	40	100	0.3B-1.8	T200	25	150	50	2.5
756261120	600:5	1.5	60	86.7	0.3B-1.8	T200	25	150	50	2.5
756261160	800:5	1.2	60	114	0.3B-1.8	T200	25	150	50	2.5
756261200	1000:5	1.0	75	142.5	0.3B-1.8	T200	25	150	50	2.5
756261240	1200:5	1.0	90	171	0.3B-1.8	T200	25	150	50	2.5
756262001	5/10:5	2.0/1.5	1	1.9	0.3B-0.9/0.3B-1.8	T100/200	25	150	50	2.5
756262002	10/20:5	2.0/1.5	2	3.8	0.3B-0.9/0.3B-1.8	T100/200	25	150	50	2.5
756262005	25/50:5	2.0/1.5	5	9.5	0.3B-0.9/0.3B-1.8	T100/200	25	150	50	2.5
756262006	30/60:5	2.0/1.5	6	11.4	0.3B-0.9/0.3B-1.8	T100/200	25	150	50	2.5
756262010	50/100:5	2.0/1.5	10	19	0.3B-0.9/0.3B-1.8	T100/200	25	150	50	2.5
756262015	75/150:5	2.0/1.5	15	28.5	0.3B-0.9/0.3B-1.8	T100/200	25	150	50	2.5
756262020	100/200:5	2.0/1.5	20	38	0.3B-0.9/0.3B-1.8	T100/200	25	150	50	2.5
756262030	150/300:5	2.0/1.5	30	57	0.3B-0.9/0.3B-1.8	T100/200	25	150	50	2.5
756262040	200/400:5	2.0/1.5	40	76	0.3B-0.9/0.3B-1.8	T100/200	25	150	50	2.5
756262060	300/600:5	2.0/1.5	60	86.7	0.3B-0.9/0.3B-1.8	T100/200	25	150	50	2.5
756262080	400/800:5	1.2/1.2	60	114	0.3B-0.9/0.3B-1.8	T100/200	25	150	50	2.5
756262100	500/1000:5	1.0/1.0	75	142.5	0.3B-0.9/0.3B-1.8	T100/200	25	150	50	2.5
756262120	600/1200:5	1.0/1.0	90	171	0.3B-0.9/0.3B-1.8	T100/200	25	150	50	2.5
756269001	5:5	1.5	0.5	0.95	0.15B-0.9	-	25	150	50	2.5
756269002	10:5	1.5	1	1.9	0.15B-0.9	-	25	150	50	2.5
756269010	50:5	1.5	5	9.5	0.15B-0.9	-	25	150	50	2.5
756269015	75:5	1.5	7.5	14.25	0.15B-0.9	-	25	150	50	2.5
756269020	100:5	1.5	10	19	0.15B-0.9	-	25	150	50	2.5
756269120	600:5	1.5	10	19	0.15B-0.9	-	25	150	50	2.5
756269160	800:5	1.2	60	86.7	0.15B-0.9	-	25	150	50	2.5
756269200	1000:5	1.0	60	114	0.15B-0.9	-	25	150	50	2.5
756269240	1200:5	1.0	90	171	0.15B-0.9	-	25	150	50	2.5
756268001	5/10:5	2.0/1.5	1	1.9	0.15B-0.5/B-0.9	-	25	150	50	2.5
756268002	10/20:5	2.0/1.5	2	3.8	0.15B-0.5/B-0.9	-	25	150	50	2.5
756268060	300/600:5	2.0/1.5	60	86.7	0.15B-0.5/B-0.9	-	25	150	50	2.5
756268080	400/800:5	1.2/1.2	60	114	0.15B-0.5/B-0.9	-	25	150	50	2.5
756268100	500/1000:5	1.0/1.0	75	142.5	0.15B-0.5/B-0.9	-	25	150	50	2.5
756268120	600/1200:5	1.0/1.0	90	171	0.15B-0.5/B-0.9	-	25	150	50	2.5

CRF-24

25 kV CURRENT TRANSFORMER

Electrical characteristics

Code * (CEP)	Current Ratio (Primary: Secondary) (A)	Continuous Thermal Current Rating Factor @ 30°C	Short-time Thermal Current (kA/1s)	Short-time Mechanical Current (kA_{peak})	IEEE Metering Accuracy	Relay Accuracy	Nominal Voltage System (kV)	BIL (kV)	Power-Frequency Withstand Voltage (1 min)	
									Primary & Secondary (kV_{rms})	Secondary Winding (kV_{rms})
High Accuracy Extended Range 5% nominal current to Rating Factor										
756267001	5:5	2.0	0.5	0.95	0.15S B-0.5	-	25	150	50	2.5
756267002	10:5	2.0	1	1.9	0.15S B-0.5	-	25	150	50	2.5
756267010	50:5	2.0	5	9.5	0.15S B-0.5	-	25	150	50	2.5
756267015	75:5	2.0	7.5	14.25	0.15S B-0.5	-	25	150	50	2.5
756267020	100:5	2.0	10	19	0.15S B-0.5	-	25	150	50	2.5
756267120	600:5	2.0	10	19	0.15S B-0.5	-	25	150	50	2.5
756267160	800:5	1.5	60	86.7	0.15S B-0.9	-	25	150	50	2.5
756267200	1000:5	1.2	60	114	0.15S B-0.9	-	25	150	50	2.5
756267240	1200:5	1.2	90	171	0.15S B-0.9	-	25	150	50	2.5
High Accuracy Extended Range 1% nominal current to Rating Factor										
756266040	200:5	4.0	10	19	0.15 B-1.8	-	25	150	50	2.5
756266120	600:5	3.0	10	19	0.15 B-1.8	-	25	150	50	2.5
756266200	1000:5	2.0	60	114	0.15 B-1.8	-	25	150	50	2.5
756266240	1200:5	1.5	90	171	0.15 B-1.8	-	25	150	50	2.5

*** For HCEP Option add (–H) to the end of the code number.**
Additional ratings available upon request.

CRF-24

25 kV CURRENT TRANSFORMER

Notes:

CE-034

34.5 kV CURRENT TRANSFORMER

OUTDOOR
60 Hertz

ARTECHE CE series are dry type outdoor service top-core current transformers. The core is encapsulated with Type B epoxy resin which provides excellent internal dielectric properties and mechanical strength. The external layer of Cycloaliphatic Epoxy Resin (CEP) provides resistance to ultraviolet rays and the effects of tracking and erosion on the exterior of the transformer ensuring a long mechanical and electrical life. The transformer is maintenance free.

The external layer can be manufactured with Hydrophobic Cycloaliphatic Epoxy Resin (HCEP) which improves service life expectancy due to its improved tracking and erosion resistance. HCEP additionally increases the transformer's weatherability and offers better performance in heavily polluted environments.

The core is built with high permeability grain oriented silicon steel laminations for low losses. The windings are copper wire with copper plate double isolation. The concentric distribution of the coils prevents magnetic flux leakage, achieving greater accuracy and higher capacity to withstand mechanical stresses in adverse operating conditions. The cores and windings are located in the upper part of the transformer. This head is coated with a conductive layer, which provides an adequate electric field control.

Partial Discharge measurements exceed the IEEE, CAN/CSA and IEC requirements.

Mechanical characteristics

Insulation Material	Colors	Weight (lbs.)	Creepage distance (in)	Strike distance (in)
Resin	Gray*	550	37.6	11

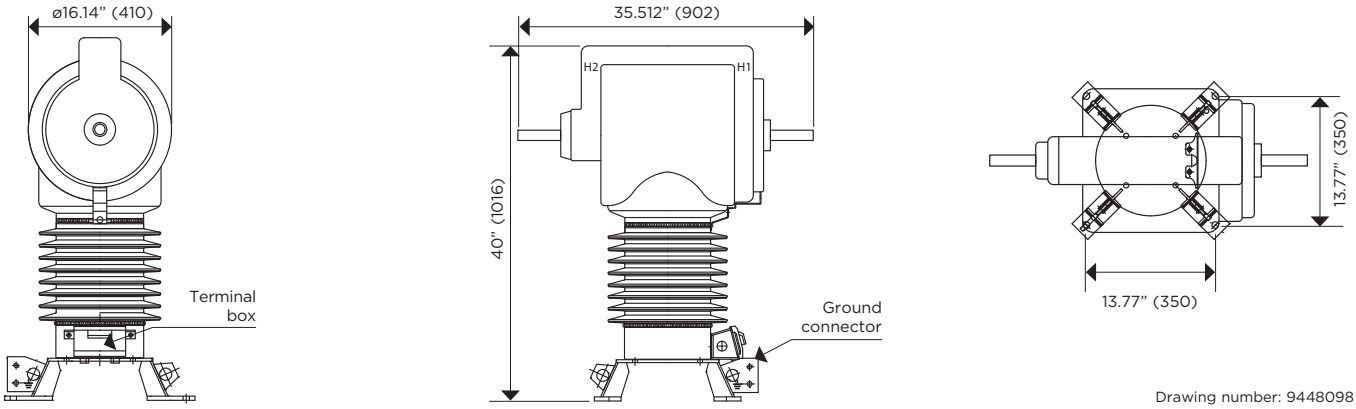

Drawing number: 9448098

CONNECTIONS

PRIMARY TERMINAL

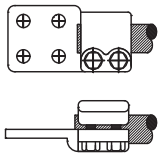

Type: PM30MC0-1-4N-E
Material: Aluminum

GROUND CONNECTOR

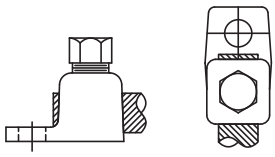

Type: LZ-500
Material: Copper
Range: 4/OTRE-500MCM

SECONDARY TERMINAL

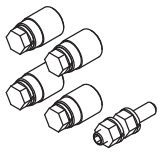

Type: Hex screw
Material: Steel

MARKING (Single Primary Ratio)

ONE SECONDARY

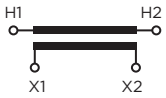

ONE SECONDARY with tap

Approximate dimensions in inches (mm).
* Brown color available upon request

CE-034

34.5 kV CURRENT TRANSFORMER

Electrical characteristics

Code * (CEP)	Current Ratio (Primary: Secondary) (A)	Continuous Thermal Current Rating Factor @ 30°C	Short-time Thermal Current (kA/1s)	Short-time Mechanical Current (kA_{peak})	IEEE Metering Accuracy	Relay Accuracy	Nominal Voltage System (kV)	BIL (kV)	Power-Frequency Withstand Voltage (1 min)	
									Primary & Secondary (kV_{rms})	Secondary Winding (kV_{rms})
756151001	5:5	2,0	0.5	0.95	0.3B-1.8	T-400	34.5	200	70	2.5
756151002	10:5	2,0	1	1.9	0.3B-1.8	T-400	34.5	200	70	2.5
756151003	15:5	2,0	1.5	2.85	0.3B-1.8	T-400	34.5	200	70	2.5
756151004	20:5	2,0	2	3.8	0.3B-1.8	T-400	34.5	200	70	2.5
756151005	25:5	2,0	2.5	4.75	0.3B-1.8	T-400	34.5	200	70	2.5
756151006	30:5	2,0	3	5.7	0.3B-1.8	T-400	34.5	200	70	2.5
756151008	40:5	2,0	4	7.6	0.3B-1.8	T-400	34.5	200	70	2.5
756151010	50:5	2,0	5	9.5	0.3B-1.8	T-400	34.5	200	70	2.5
756151015	75:5	2,0	6	11.4	0.3B-1.8	T-400	34.5	200	70	2.5
756151020	100:5	2,0	7.5	14.25	0.3B-1.8	T-400	34.5	200	70	2.5
756151030	150:5	2,0	10	19	0.3B-1.8	T-400	34.5	200	70	2.5
756151040	200:5	2,0	20	38	0.3B-1.8	T-400	34.5	200	70	2.5
756151060	300:5	2,0	30	57	0.3B-1.8	T-400	34.5	200	70	2.5
756151080	400:5	2,0	40	76	0.3B-1.8	T-400	34.5	200	70	2.5
756151120	600:5	2,0	50	9.5	0.3B-1.8	T-400	34.5	200	70	2.5
756151160	800:5	2,0	60	86.7	0.3B-1.8	T-400	34.5	200	70	2.5
756151200	1000:5	1.5	60	114	0.3B-1.8	T-400	34.5	200	70	2.5
756151240	1200:5	1.5	75	142.5	0.3B-1.8	T-400	34.5	200	70	2.5
756151400	2000:5	1.2	90	171	0.3B-1.8	T-800	34.5	200	70	2.5
756152001	10/20:5	3.0/2.0	2	3.8	0.3B-1.8/0.3B1.8	T200/T400	34.5	200	70	2.5
756152005	25/50:5	3.0/2.0	5	9.5	0.3B-1.8/0.3B1.8	T200/T400	34.5	200	70	2.5
756152006	30/60:5	3.0/2.0	6	11.4	0.3B-1.8/0.3B1.8	T200/T400	34.5	200	70	2.5
756152010	50/100:5	3.0/2.0	10	19	0.3B-1.8/0.3B1.8	T200/T400	34.5	200	70	2.5
756152015	75/150:5	3.0/2.0	15	28.5	0.3B-1.8/0.3B1.8	T200/T400	34.5	200	70	2.5
756152020	100/200:5	3.0/2.0	20	38	0.3B-1.8/0.3B1.8	T200/T400	34.5	200	70	2.5
756152030	150/300:5	3.0/2.0	30	57	0.3B-1.8/0.3B1.8	T200/T400	34.5	200	70	2.5
756152040	200/400:5	3.0/2.0	40	76	0.3B-1.8/0.3B1.8	T200/T400	34.5	200	70	2.5
756152060	300/600:5	3.0/2.0	60	86.7	0.3B-1.8/0.3B1.8	T200/T400	34.5	200	70	2.5
756152080	400/800:5	3.0/2.0	60	114	0.3B-1.8/0.3B1.8	T200/T400	34.5	200	70	2.5
756152100	500/1000:5	3.0/1.5	75	142.5	0.3B-1.8/0.3B1.8	T200/T400	34.5	200	70	2.5
756152120	600/1200:5	3.0/1.5	90	171	0.3B-1.8/0.3B1.8	T200/T400	34.5	200	70	2.5
756152150	750/1500:5	3.0/1.5	90	171	0.3B-1.8/0.3B1.8	T200/T400	34.5	200	70	2.5
756152200	1000/2000:5	2.4/1.2	90	171	0.3B-1.8/0.3B1.8	T400/T800	34.5	200	70	2.5
756152300	1500/3000:5	2.4/1.2	90	171	0.3B-1.8/0.3B1.8	T400/T800	34.5	200	70	2.5

*** For HCEP Option add (–H) to the end of the code number.**
Additional ratings available upon request.

CRF-36

34.5 kV CURRENT TRANSFORMER

OUTDOOR
60 Hertz

ARTECHE CR series are dry type outdoor service current transformers. The core is encapsulated with Type B epoxy resin which provides excellent internal dielectric properties and mechanical strength. The external layer of Cycloaliphatic Epoxy Resin (CEP) provides resistance to ultraviolet rays and the effects of tracking and erosion on the exterior of the transformer ensuring a long mechanical and electrical life. The transformer is maintenance free.

The external layer can be manufactured with Hydrophobic Cycloaliphatic Epoxy Resin (HCEP) which improves service life expectancy due to its improved tracking and erosion resistance. HCEP additionally increases the transformer's weatherability and offers better performance in heavily polluted environments.

The core is built with high permeability grain oriented silicon steel laminations for low losses. The windings are copper wire with copper plate double isolation. The concentric distribution of the coils prevents magnetic flux leakage, achieving greater accuracy and higher capacity to withstand mechanical stresses in adverse operating conditions.

Partial Discharge measurements exceed the IEEE, CAN/CSA and IEC requirements.

Mechanical characteristics

Insulation Material	Colors	Weight (lbs.)	Creepage distance (in)	Strike distance (in)
Resin	Gray*	134.4	36.2	15

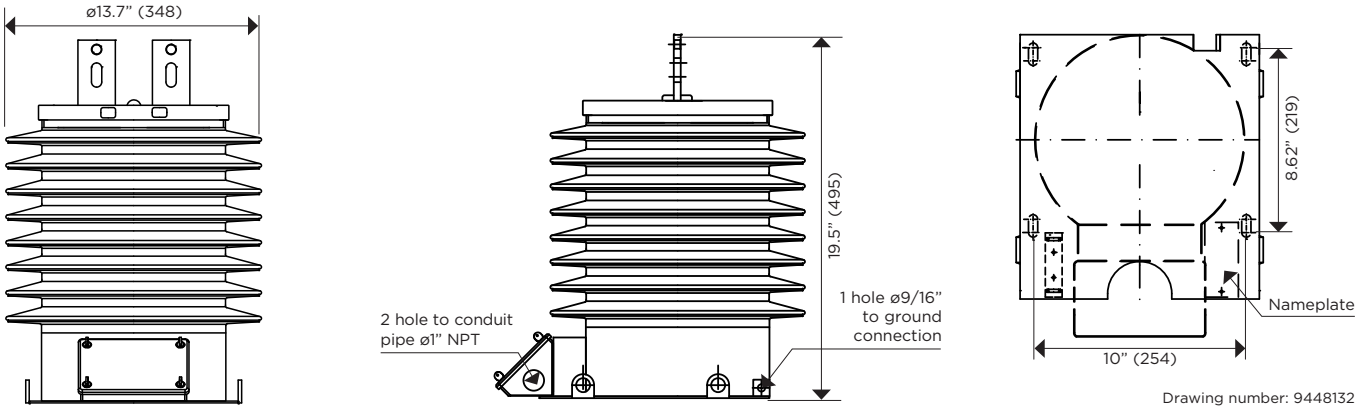

Drawing number: 9448132

CONNECTIONS

PRIMARY TERMINAL

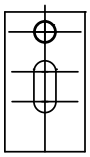

Type: NEMA-2
Material: Copper

GROUND CONNECTOR

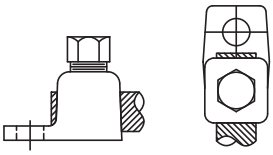

Type: TE-12-250
Material: Copper
Range: 4TRE-250MCM

SECONDARY TERMINAL

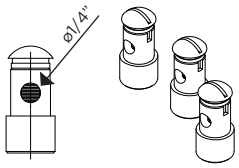

Type: Quick Connector
Material: Brass

MARKING (Single Primary Ratio)

ONE SECONDARY

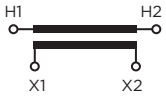

ONE SECONDARY with tap

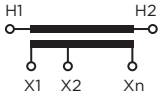

Approximate dimensions in inches (mm).
* Brown color available upon request

CRF-36

34.5 kV CURRENT TRANSFORMER

Electrical characteristics

Code * (CEP)	Current Ratio (Primary: Secondary) (A)	Continuous Thermal Current Rating Factor @ 30°C	Short-time Thermal Current (kA/1s)	Short-time Mechanical Current (kA_{peak})	IEEE Metering Accuracy	Relay Accuracy	Nominal Voltage System (kV)	BIL (kV)	Power-Frequency Withstand Voltage (1 min)	
									Primary & Secondary (kV_{rms})	Secondary Winding (kV_{rms})
756273001	5:5	3.0	0.5	1.25	0.3B-1.8	T100	34.5	200	70	2.5
756273002	10:5	3.0	1	2.5	0.3B-1.8	T100	34.5	200	70	2.5
756273003	15:5	3.0	1.5	3.75	0.3B-1.8	T100	34.5	200	70	2.5
756273004	20:5	3.0	2	5	0.3B-1.8	T100	34.5	200	70	2.5
756273005	25:5	3.0	2.5	6.25	0.3B-1.8	T100	34.5	200	70	2.5
756273006	30:5	3.0	3	7.5	0.3B-1.8	T100	34.5	200	70	2.5
756273008	40:5	3.0	4	10	0.3B-1.8	T100	34.5	200	70	2.5
756273010	50:5	3.0	5	12.5	0.3B-1.8	T100	34.5	200	70	2.5
756273015	75:5	3.0	7.5	18.75	0.3B-1.8	T100	34.5	200	70	2.5
756273020	100:5	3.0	10	25	0.3B-1.8	T100	34.5	200	70	2.5
756273030	150:5	3.0	15	37.5	0.3B-1.8	T100	34.5	200	70	2.5
756273040	200:5	3.0	20	50	0.3B-1.8	T100	34.5	200	70	2.5
756273060	300:5	3.0	30	75	0.3B-1.8	T100	34.5	200	70	2.5
756273080	400:5	3.0	40	100	0.3B-1.8	T100	34.5	200	70	2.5
756273120	600:5	2.0	60	150	0.3B-1.8	T100	34.5	200	70	2.5
756273160	800:5	1.5	60	150	0.3B-1.8	T100	34.5	200	70	2.5
756273200	1000:5	1.0	75	127.5	0.3B-1.8	T100	34.5	200	70	2.5
756273240	1200:5	1.0	90	162	0.3B-1.8	T100	34.5	200	70	2.5
756271001	5:5	1.5	0.5	0.95	0.3B-1.8	T200	34.5	200	70	2.5
756271002	10:5	1.5	1	1.9	0.3B-1.8	T200	34.5	200	70	2.5
756271003	15:5	1.5	1.5	2.85	0.3B-1.8	T200	34.5	200	70	2.5
756271004	20:5	1.5	2	3.8	0.3B-1.8	T200	34.5	200	70	2.5
756271005	25:5	1.5	2.5	4.75	0.3B-1.8	T200	34.5	200	70	2.5
756271006	30:5	1.5	3	5.7	0.3B-1.8	T200	34.5	200	70	2.5
756271008	40:5	1.5	4	7.6	0.3B-1.8	T200	34.5	200	70	2.5
756271010	50:5	1.5	5	9.5	0.3B-1.8	T200	34.5	200	70	2.5
756271012	60:5	1.5	6	11.4	0.3B-1.8	T200	34.5	200	70	2.5
756271015	75:5	1.5	7.5	14.25	0.3B-1.8	T200	34.5	200	70	2.5
756271020	100:5	1.5	10	19	0.3B-1.8	T200	34.5	200	70	2.5
756271040	200:5	1.5	20	38	0.3B-1.8	T200	34.5	200	70	2.5
756271060	300:5	1.5	30	57	0.3B-1.8	T200	34.5	200	70	2.5
756271080	400:5	1.5	40	76	0.3B-1.8	T200	34.5	200	70	2.5
756271100	500:5	1.5	50	9.5	0.3B-1.8	T200	34.5	200	70	2.5
756271120	600:5	1.2	60	86.7	0.3B-1.8	T200	34.5	200	70	2.5
756271160	800:5	1.0	60	114	0.3B-1.8	T200	34.5	200	70	2.5
756271200	1000:5	1.0	75	142.5	0.3B-1.8	T200	34.5	200	70	2.5
756271240	1200:5	1.0	90	171	0.3B-1.8	T200	34.5	200	70	2.5
756272002	10/20:5	2.0/1.5	2	3.8	0.3B-0.9/0.3B-1.8	T100/T200	34.5	200	70	2.5
756272005	25/50:5	2.0/1.5	5	9.5	0.3B-0.9/0.3B-1.8	T100/T200	34.5	200	70	2.5
756272006	30/60:5	2.0/1.5	6	11.4	0.3B-0.9/0.3B-1.8	T100/T200	34.5	200	70	2.5
756272010	50/100:5	2.0/1.5	10	19	0.3B-0.9/0.3B-1.8	T100/T200	34.5	200	70	2.5
756272015	75/150:5	2.0/1.5	15	28.5	0.3B-0.9/0.3B-1.8	T100/T200	34.5	200	70	2.5
756272020	100/200:5	2.0/1.5	20	38	0.3B-0.9/0.3B-1.8	T100/T200	34.5	200	70	2.5

CRF-36

34.5 kV CURRENT TRANSFORMER

Electrical characteristics

Code * (CEP)	Current Ratio (Primary: Secondary) (A)	Continuous Thermal Current Rating Factor @ 30°C	Short-time Thermal Current (kA/1s)	Short-time Mechanical Current (kA_{peak})	IEEE Metering Accuracy	Relay Accuracy	Nominal Voltage System (kV)	BIL (kV)	Power-Frequency Withstand Voltage (1 min)	
									Primary & Secondary (kV_{rms})	Secondary Winding (kV_{rms})
756272030	150/300:5	2.0/1.5	30	57	0.3B-0.9/0.3B-1.8	T100/T200	34.5	200	70	2.5
756272040	200/400:5	2.0/1.5	40	76	0.3B-0.9/0.3B-1.8	T100/T200	34.5	200	70	2.5
756272060	300/600:5	2.0/1.5	60	86.7	0.3B-0.9/0.3B-1.8	T100/T200	34.5	200	70	2.5
756272080	400/800:5	1.2/1.2	60	114	0.3B-0.9/0.3B-1.8	T100/T200	34.5	200	70	2.5
756272100	500/1000:5	1.0/1.0	75	142.5	0.3B-0.9/0.3B-1.8	T100/T200	34.5	200	70	2.5
756272120	600/1200:5	1.0/1.0	90	171	0.3B-0.9/0.3B-1.8	T100/T200	34.5	200	70	2.5
756279001	5:5	1.5	0.5	0.95	0.15B-0.9	-	34.5	200	70	2.5
756279002	10:5	1.5	1	1.9	0.15B-0.9	-	34.5	200	70	2.5
756279010	50:5	1.5	5	9.5	0.15B-0.9	-	34.5	200	70	2.5
756279015	75:5	1.5	7.5	14.25	0.15B-0.9	-	34.5	200	70	2.5
756279020	100:5	1.5	10	19	0.15B-0.9	-	34.5	200	70	2.5
756279120	600:5	1.2	60	86.7	0.15B-0.9	-	34.5	200	70	2.5
756279160	800:5	1.0	60	114	0.15B-0.9	-	34.5	200	70	2.5
756279240	1200:5	1.0	90	171	0.15B-0.9	-	34.5	200	70	2.5
756278001	5/10:5	2.0/1.5	1	1.9	0.15B-0.5/B-0.9	-	34.5	200	70	2.5
756278002	10/20:5	2.0/1.5	2	3.8	0.15B-0.5/B-0.9	-	34.5	200	70	2.5
756278060	300/600:5	2.0/1.5	60	86.7	0.15B-0.5/B-0.9	-	34.5	200	70	2.5
756278080	400/800:5	1.2/1.2	60	114	0.15B-0.5/B-0.9	-	34.5	200	70	2.5
756278100	500/1000:5	1.0/1.0	75	142.5	0.15B-0.5/B-0.9	-	34.5	200	70	2.5
756278120	600/1200:5	1.0/1.0	90	171	0.15B-0.5/B-0.9	-	34.5	200	70	2.5
High Accuracy Extended Range 1% nominal current to Rating Factor										
756276040	200:5	2.0	20	50	0.15 B-1.8	-	34.5	200	70	2.5
756276120	600:5	1.5	60	150	0.15 B-1.8	-	34.5	200	70	2.5
756276200	1000:5	1.5	75	127.5	0.15 B-1.8	-	34.5	200	70	2.5
756276240	1200:5	1.2	90	162	0.15 B-1.8	-	34.5	200	70	2.5

*** For HCEP Option add (–H) to the end of the code number.**
Additional ratings available upon request.

CRF-36

34.5 kV CURRENT TRANSFORMER

Notes:

CRH-36

34.5 kV CURRENT TRANSFORMER

OUTDOOR
60 Hertz

ARTECHE CR series are dry type outdoor service current transformers. The core is encapsulated with Type B epoxy resin which provides excellent internal dielectric properties and mechanical strength. The external layer of Cycloaliphatic Epoxy Resin (CEP) provides resistance to ultraviolet rays and the effects of tracking and erosion on the exterior of the transformer ensuring a long mechanical and electrical life. The transformer is maintenance free.

The external layer can be manufactured with Hydrophobic Cycloaliphatic Epoxy Resin (HCEP) which improves service life expectancy due to its improved tracking and erosion resistance. HCEP additionally increases the transformer's weatherability and offers better performance in heavily polluted environments.

The core is built with high permeability grain oriented silicon steel laminations for low losses. The windings are copper wire with copper plate double isolation. The concentric distribution of the coils prevents magnetic flux leakage, achieving greater accuracy and higher capacity to withstand mechanical stresses in adverse operating conditions.

Partial Discharge measurements exceed the IEEE, CAN/CSA and IEC requirements.

Mechanical characteristics

Insulation Material	Colors	Weight (lbs.)	Creepage distance (in)	Strike distance (in)
Resin	Gray*	253.5	47.83	19.3

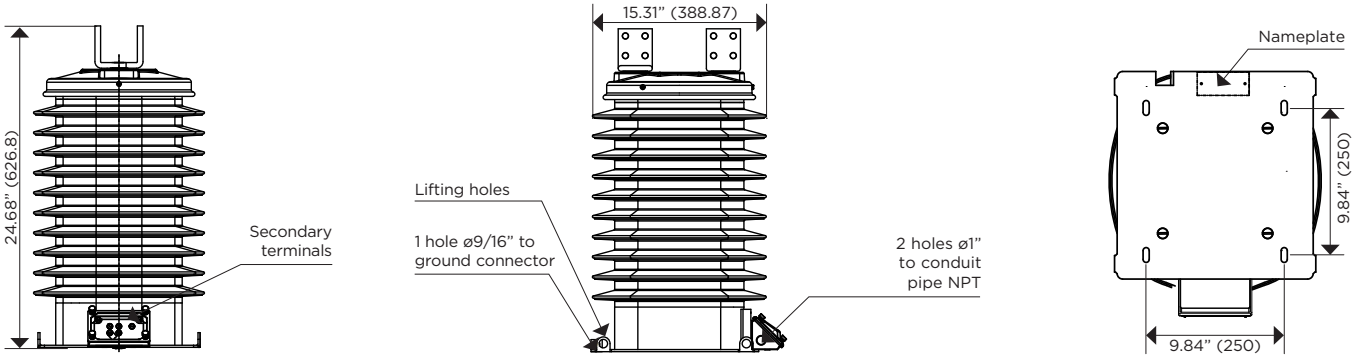

Drawing number: 4286121

CONNECTIONS

PRIMARY TERMINAL

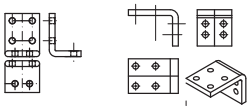

1500 A 2000 A

Type: NEMA-4
Material: Copper

GROUND CONNECTOR

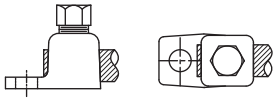

Type: LZ-250
Material: Copper
Range: 4TRE-250MCM

SECONDARY TERMINAL

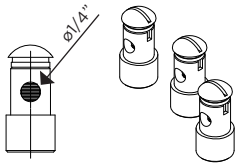

Type: Quick Connector
Material: Brass

MARKING (Single Primary Ratio)

ONE SECONDARY

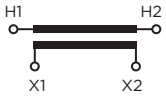

ONE SECONDARY with tap

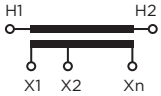

Approximate dimensions in inches (mm).
* Brown color available upon request

CRH-36

34.5 kV CURRENT TRANSFORMER

Electrical characteristics

Code * (CEP)	Current Ratio (Primary: Secondary) (A)	Continuous Thermal Current Rating Factor @ 30°C	Short-time Thermal Current (kA/1s)	Short-time Mechanical Current (kA_{peak})	IEEE Metering Accuracy	Relay Accuracy	Nominal Voltage System (kV)	BIL (kV)	Power-Frequency Withstand Voltage (1 min)	
									Primary & Secondary (kV_{rms})	Secondary Winding (kV_{rms})
756861001	5:5	2.0	0.5	0.95	0.3B-1.8	T200	34.5	200	70	2.5
756861002	10:5	2.0	1	1.9	0.3B-1.8	T200	34.5	200	70	2.5
756861003	15:5	2.0	1.5	2.85	0.3B-1.8	T200	34.5	200	70	2.5
756861004	20:5	2.0	2	3.8	0.3B-1.8	T200	34.5	200	70	2.5
756861005	25:5	2.0	2.5	4.75	0.3B-1.8	T200	34.5	200	70	2.5
756861006	30:5	2.0	3	5.7	0.3B-1.8	T200	34.5	200	70	2.5
756861008	40:5	2.0	4	7.6	0.3B-1.8	T200	34.5	200	70	2.5
756861010	50:5	2.0	5	9.5	0.3B-1.8	T200	34.5	200	70	2.5
756861015	75:5	2.0	6	11.4	0.3B-1.8	T200	34.5	200	70	2.5
756861020	100:5	2.0	7.5	14.25	0.3B-1.8	T200	34.5	200	70	2.5
756861030	150:5	2.0	10	19	0.3B-1.8	T200	34.5	200	70	2.5
756861040	200:5	2.0	20	38	0.3B-1.8	T200	34.5	200	70	2.5
756861060	300:5	2.0	30	57	0.3B-1.8	T200	34.5	200	70	2.5
756861080	400:5	2.0	40	76	0.3B-1.8	T200	34.5	200	70	2.5
756861100	500:5	2.0	50	9.5	0.3B-1.8	T200	34.5	200	70	2.5
756861120	600:5	2.0	60	86.7	0.3B-1.8	T200	34.5	200	70	2.5
756861160	800:5	2.0	60	114	0.3B-1.8	T200	34.5	200	70	2.5
756861200	1000:5	1.5	75	142.5	0.3B-1.8	T200	34.5	200	70	2.5
756861240	1200:5	1.5	90	171	0.3B-1.8	T200	34.5	200	70	2.5
756862002	10/20:5	3.0/2.0	2	3.8	0.3B-1.8/0.3B1.8	T100/T200	34.5	200	70	2.5
756862005	25/50:5	3.0/2.0	5	9.5	0.3B-1.8/0.3B1.8	T100/T200	34.5	200	70	2.5
756862006	30/60:5	3.0/2.0	6	11.4	0.3B-1.8/0.3B1.8	T100/T200	34.5	200	70	2.5
756862010	50/100:5	3.0/2.0	10	19	0.3B-1.8/0.3B1.8	T100/T200	34.5	200	70	2.5
756862015	75/150:5	3.0/2.0	15	28.5	0.3B-1.8/0.3B1.8	T100/T200	34.5	200	70	2.5
756862020	100/200:5	3.0/2.0	20	38	0.3B-1.8/0.3B1.8	T100/T200	34.5	200	70	2.5
756862030	150/300:5	3.0/2.0	30	57	0.3B-1.8/0.3B1.8	T100/T200	34.5	200	70	2.5
756862040	200/400:5	3.0/2.0	40	76	0.3B-1.8/0.3B1.8	T100/T200	34.5	200	70	2.5
756862030	300/600:5	3.0/2.0	60	86.7	0.3B-1.8/0.3B1.8	T100/T200	34.5	200	70	2.5
756862030	400/800:5	3.0/2.0	60	114	0.3B-1.8/0.3B1.8	T100/T200	34.5	200	70	2.5
756862030	500/1000:5	3.0/1.5	75	142.5	0.3B-1.8/0.3B1.8	T100/T200	34.5	200	70	2.5
756862030	600/1200:5	3.0/1.5	90	171	0.3B-1.8/0.3B1.8	T100/T200	34.5	200	70	2.5
High Accuracy Extended Range 1% nominal current to Rating Factor										
756868040	200:5	4.0	20	38	0.15 B-1.8	-	34.5	200	70	2.5
756868120	600:5	3.0	60	86.7	0.15 B-1.8	-	34.5	200	70	2.5
756868200	1000:5	2.0	75	142.5	0.15 B-1.8	-	34.5	200	70	2.5
756868240	1200:5	1.5	90	171	0.15 B-1.8	-	34.5	200	70	2.5

*** For HCEP Option add (–H) to the end of the code number.**
Additional ratings available upon request.

CRK-36

34.5 kV CURRENT TRANSFORMER

OUTDOOR
60 Hertz

ARTECHE CR series are dry type outdoor service current transformers. The core is encapsulated with Type B epoxy resin which provides excellent internal dielectric properties and mechanical strength. The external layer of Cycloaliphatic Epoxy Resin (CEP) provides resistance to ultraviolet rays and the effects of tracking and erosion on the exterior of the transformer ensuring a long mechanical and electrical life. The transformer is maintenance free.

The external layer can be manufactured with Hydrophobic Cycloaliphatic Epoxy Resin (HCEP) which improves service life expectancy due to its improved tracking and erosion resistance. HCEP additionally increases the transformer's weatherability and offers better performance in heavily polluted environments.

The core is built with high permeability grain oriented silicon steel laminations for low losses. The windings are copper wire with copper plate double isolation. The concentric distribution of the coils prevents magnetic flux leakage, achieving greater accuracy and higher capacity to withstand mechanical stresses in adverse operating conditions.

Partial Discharge measurements exceed the IEEE, CAN/CSA and IEC requirements.

Mechanical characteristics

Insulation Material	Colors	Weight (lbs.)	Creepage distance (in)	Strike distance (in)
Resin	Gray*	322	44.68	13.8

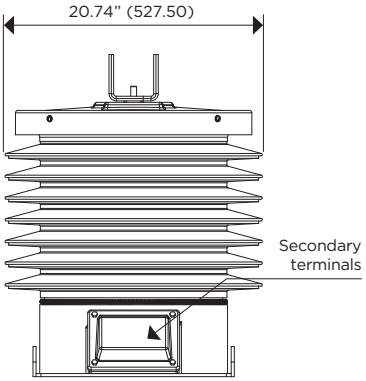

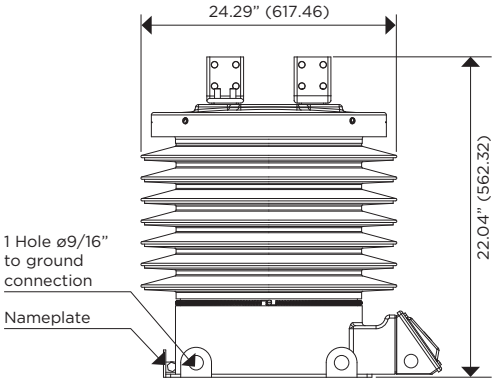

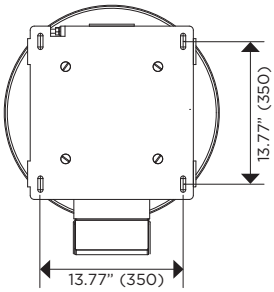

Drawing number: 4286124

CONNECTIONS

PRIMARY TERMINAL

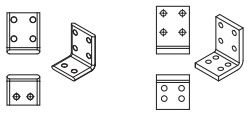

Type: NEMA-4
Material: Copper

GROUND CONNECTOR

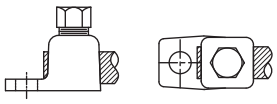

Type: LZ-250
Material: Copper
Range: 4TRE-250MCM

SECONDARY TERMINAL

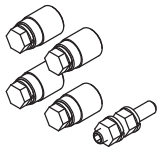

Type: Hex screw
Material: Steel

MARKING (Single Primary Ratio)

ONE SECONDARY

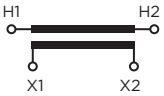

ONE SECONDARY with tap

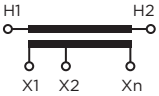

Approximate dimensions in inches (mm).
* Brown color available upon request

CRK-36

34.5 kV CURRENT TRANSFORMER

Electrical characteristics

Code * (CEP)	Current Ratio (Primary: Secondary) (A)	Continuous Thermal Current Rating Factor @ 30°C	Short-time Thermal Current (kA/1s)	Short-time Mechanical Current (kA_{peak}))	IEEE Metering Accuracy	Relay Accuracy	Nominal Voltage System (kV)	BIL (kV)	Power-Frequency Withstand Voltage (1 min)	
									Primary & Secondary (kV_{rms})	Secondary Winding (kV_{rms})
756911001	5:5	1.5	0.5	0.95	0.3B-1.8	T400	34.5	200	70	2.5
756911002	10:5	1.5	1	1.9	0.3B-1.8	T400	34.5	200	70	2.5
756911003	15:5	1.5	1.5	2.85	0.3B-1.8	T400	34.5	200	70	2.5
756911004	20:5	1.5	2	3.8	0.3B-1.8	T400	34.5	200	70	2.5
756911005	25:5	1.5	2.5	4.75	0.3B-1.8	T400	34.5	200	70	2.5
756911006	30:5	1.5	3	5.7	0.3B-1.8	T400	34.5	200	70	2.5
756911008	40:5	1.5	4	7.6	0.3B-1.8	T400	34.5	200	70	2.5
756911010	50:5	1.5	5	9.5	0.3B-1.8	T400	34.5	200	70	2.5
756911015	75:5	1.5	6	11.4	0.3B-1.8	T400	34.5	200	70	2.5
756911020	100:5	1.5	7.5	14.25	0.3B-1.8	T400	34.5	200	70	2.5
756911030	150:5	1.5	10	19	0.3B-1.8	T400	34.5	200	70	2.5
756911040	200:5	1.5	20	38	0.3B-1.8	T400	34.5	200	70	2.5
756911060	300:5	1.5	30	57	0.3B-1.8	T400	34.5	200	70	2.5
756911080	400:5	1.5	40	76	0.3B-1.8	T400	34.5	200	70	2.5
756911100	500:5	1.5	50	9.5	0.3B-1.8	T400	34.5	200	70	2.5
756911120	600:5	1.5	60	86.7	0.3B-1.8	T400	34.5	200	70	2.5
756911160	800:5	1.5	60	114	0.3B-1.8	T400	34.5	200	70	2.5
756911200	1000:5	1.5	75	142.5	0.3B-1.8	T400	34.5	200	70	2.5
756911240	1200:5	1.5	90	171	0.3B-1.8	T400	34.5	200	70	2.5
756911400	2000:5	1.2	90	171	0.3B-1.8	T400	34.5	200	70	2.5
756911500	2500:5	1.2	90	171	0.3B-1.8	T400	34.5	200	70	2.5
756912002	10/20:5	3.0/1.5	2	3.8	0.3B-1.8/0.3B1.8	T200/T400	34.5	200	70	2.5
756912005	25/50:5	3.0/1.5	5	9.5	0.3B-1.8/0.3B1.8	T200/T400	34.5	200	70	2.5
756912006	30/60:5	3.0/1.5	6	11.4	0.3B-1.8/0.3B1.8	T200/T400	34.5	200	70	2.5
756912010	50/100:5	3.0/1.5	10	19	0.3B-1.8/0.3B1.8	T200/T400	34.5	200	70	2.5
756912015	75/150:5	3.0/1.5	15	28.5	0.3B-1.8/0.3B1.8	T200/T400	34.5	200	70	2.5
756912020	100/200:5	3.0/1.5	20	38	0.3B-1.8/0.3B1.8	T200/T400	34.5	200	70	2.5
756912030	150/300:5	3.0/1.5	30	57	0.3B-1.8/0.3B1.8	T200/T400	34.5	200	70	2.5
756912040	200/400:5	3.0/1.5	40	76	0.3B-1.8/0.3B1.8	T200/T400	34.5	200	70	2.5
756912060	300/600:5	3.0/1.5	60	86.7	0.3B-1.8/0.3B1.8	T200/T400	34.5	200	70	2.5
756912080	400/800:5	3.0/1.5	60	114	0.3B-1.8/0.3B1.8	T200/T400	34.5	200	70	2.5
756912100	500/1000:5	3.0/1.5	75	142.5	0.3B-1.8/0.3B1.8	T200/T400	34.5	200	70	2.5
756912120	600/1200:5	3.0/1.5	90	171	0.3B-1.8/0.3B1.8	T200/T400	34.5	200	70	2.5
756912150	750/1500:5	3.0/1.5	90	171	0.3B-1.8/0.3B1.8	T200/T400	34.5	200	70	2.5
756912200	1000/2000:5	2.4/1.2	90	171	0.3B-1.8/0.3B1.8	T200/T400	34.5	200	70	2.5

*** For HCEP Option add (–H) to the end of the code number.**
Additional ratings available upon request.

CE-046

46 kV CURRENT TRANSFORMER

OUTDOOR
60 Hertz

ARTECHE CE series are dry type outdoor service top-core current transformers. The core is encapsulated with Type B epoxy resin which provides excellent internal dielectric properties and mechanical strength. The external layer of Cycloaliphatic Epoxy Resin (CEP) provides resistance to ultraviolet rays and the effects of tracking and erosion on the exterior of the transformer ensuring a long mechanical and electrical life. The transformer is maintenance free.

The external layer can be manufactured with Hydrophobic Cycloaliphatic Epoxy Resin (HCEP) which improves service life expectancy due to its improved tracking and erosion resistance. HCEP additionally increases the transformer's weatherability and offers better performance in heavily polluted environments.

The core is built with high permeability grain oriented silicon steel laminations for low losses. The windings are copper wire with copper plate double isolation. The concentric distribution of the coils prevents magnetic flux leakage, achieving greater accuracy and higher capacity to withstand mechanical stresses in adverse operating conditions. The cores and windings are located in the upper part of the transformer. This head is coated with a conductive layer, which provides an adequate electric field control.

Partial Discharge measurements exceed the IEEE, CAN/CSA and IEC requirements.

Mechanical characteristics

Insulation Material	Colors	Weight (lbs.)	Creepage distance (in)	Strike distance (in)
Resin	Gray*	595	75.2	22

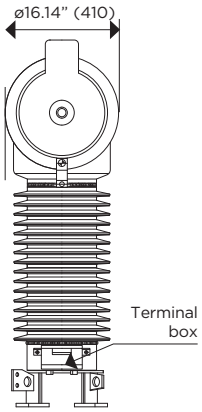

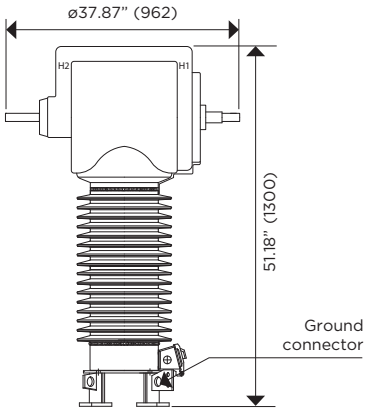

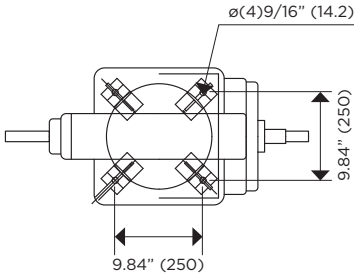

Drawing number: 9448137

CONNECTIONS

PRIMARY TERMINAL

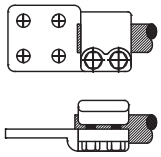

Type: PM30MC0-1-4N-E
Material: Aluminum

GROUND CONNECTOR

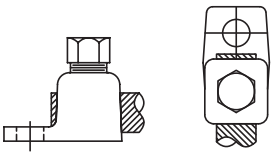

Type: LZ-500
Material: Copper
Range: 4/OTRE-500MCM

SECONDARY TERMINAL

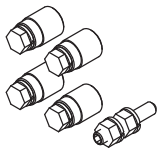

Type: Hex screw
Material: Steel

MARKING (Single Primary Ratio)

ONE SECONDARY

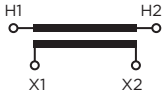

ONE SECONDARY with tap

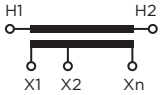

Approximate dimensions in inches (mm).
* Brown color available upon request

CE-046

46 kV CURRENT TRANSFORMER

Electrical characteristics

Code * (CEP)	Current Ratio (Primary: Secondary) (A)	Continuous Thermal Current Rating Factor @ 30°C	Short-time Thermal Current (kA/1s)	Short-time Mechanical Current (kA_{peak})	IEEE Metering Accuracy	Relay Accuracy	Nominal Voltage System (kV)	BIL (kV)	Power-Frequency Withstand Voltage (1 min)	
									Primary & Secondary (kV_{rms})	Secondary Winding (kV_{rms})
756162005	25/50:5	3.0/2.0	5	9.5	0.3B-1.8/0.3B1.8	T200/T400	46	250	95	2.5
756162006	30/60:5	3.0/2.0	6	11.4	0.3B-1.8/0.3B1.8	T200/T400	46	250	95	2.5
756162010	50/100:5	3.0/2.0	10	19	0.3B-1.8/0.3B1.8	T200/T400	46	250	95	2.5
756162015	75/150:5	3.0/2.0	15	28.5	0.3B-1.8/0.3B1.8	T200/T400	46	250	95	2.5
756162020	100/200:5	3.0/2.0	20	38	0.3B-1.8/0.3B1.8	T200/T400	46	250	95	2.5
756162030	150/300:5	3.0/2.0	30	57	0.3B-1.8/0.3B1.8	T200/T400	46	250	95	2.5
756162040	200/400:5	3.0/2.0	40	76	0.3B-1.8/0.3B1.8	T200/T400	46	250	95	2.5
756162060	300/600:5	3.0/2.0	60	86.7	0.3B-1.8/0.3B1.8	T200/T400	46	250	95	2.5
756162080	400/800:5	3.0/2.0	60	114	0.3B-1.8/0.3B1.8	T200/T400	46	250	95	2.5
756162100	500/1000:5	3.0/1.5	75	142.5	0.3B-1.8/0.3B1.8	T200/T400	46	250	95	2.5
756162120	600/1200:5	3.0/1.5	90	171	0.3B-1.8/0.3B1.8	T200/T400	46	250	95	2.5
756162150	750/1500:5	3.0/1.5	90	171	0.3B-1.8/0.3B1.8	T200/T400	46	250	95	2.5
756162200	1000/2000:5	2.4/1.2	90	171	0.3B-1.8/0.3B1.8	T400/T800	46	250	95	2.5
756162300	1500/3000:5	2.4/1.2	90	171	0.3B-1.8/0.3B1.8	T400/T800	46	250	95	2.5
High Accuracy Extended Range 1% nominal current to Rating Factor										
756166040	200:5	1.5	16	40	0.15 B-1.8	-	46	250	95	2.5
756166120	600:5	1.5	48	120	0.15 B-1.8	-	46	250	95	2.5
756166200	1000:5	1.5	50	125	0.15 B-1.8	-	46	250	95	2.5
756166240	1200:5	1.5	96	240	0.15 B-1.8	-	46	250	95	2.5

*** For HCEP Option add (–H) to the end of the code number.**
Additional ratings available upon request.

Notes:

CRH-52

46 kV CURRENT TRANSFORMER

OUTDOOR
60 Hertz

ARTECHE CR series are dry type outdoor service current transformers. The core is encapsulated with Type B epoxy resin which provides excellent internal dielectric properties and mechanical strength. The external layer of Cycloaliphatic Epoxy Resin (CEP) provides resistance to ultraviolet rays and the effects of tracking and erosion on the exterior of the transformer ensuring a long mechanical and electrical life. The transformer is maintenance free.

The external layer can be manufactured with Hydrophobic Cycloaliphatic Epoxy Resin (HCEP) which improves service life expectancy due to its improved tracking and erosion resistance. HCEP additionally increases the transformer's weatherability and offers better performance in heavily polluted environments.

The core is built with high permeability grain oriented silicon steel laminations for low losses. The windings are copper wire with copper plate double isolation. The concentric distribution of the coils prevents magnetic flux leakage, achieving greater accuracy and higher capacity to withstand mechanical stresses in adverse operating conditions.

Partial Discharge measurements exceed the IEEE, CAN/CSA and IEC requirements.

Mechanical characteristics

Insulation Material	Colors	Weight (lbs.)	Creepage distance (in)	Strike distance (in)
Resin	Gray*	253.53	47.83	23

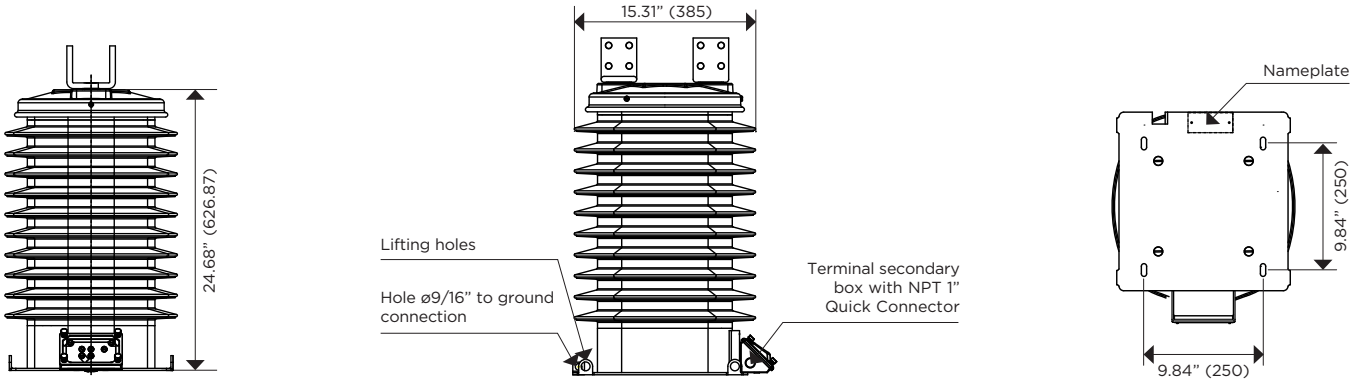

Drawing number: 4286122

CONNECTIONS

PRIMARY TERMINAL

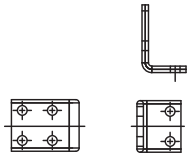

Type: NEMA-4
Material: Copper

GROUND CONNECTOR

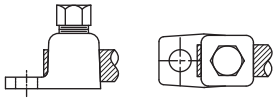

Type: LZ-250
Material: Copper
Range: 4TRE-250MCM

SECONDARY TERMINAL

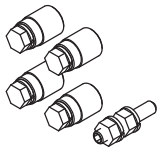

Type: Hex screw
Material: Steel

MARKING (Single Primary Ratio)

ONE SECONDARY

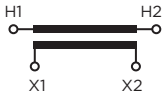

ONE SECONDARY with tap

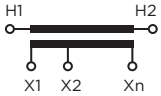

Approximate dimensions in inches (mm).
* Brown color available upon request

CRH-52

46 kV CURRENT TRANSFORMER

Electrical characteristics

Code * (CEP)	Current Ratio (Primary: Secondary) (A)	Continuous Thermal Current Rating Factor @ 30°C	Short-time Thermal Current (kA/1s)	Short-time Mechanical Current (kA_{peak})	IEEE Metering Accuracy	Relay Accuracy	Nominal Voltage System (kV)	BIL (kV)	Power-Frequency Withstand Voltage (1 min)	
									Primary & Secondary (kV_{rms})	Secondary Winding (kV_{rms})
756872005	25/50:5	2.4/1.2	5	9.5	0.3B-1.8/0.3B1.8	T100/T200	46	250	95	2.5
756872006	30/60:5	2.4/1.2	6	11.4	0.3B-1.8/0.3B1.8	T100/T200	46	250	95	2.5
756872010	50/100:5	2.4/1.2	10	19	0.3B-1.8/0.3B1.8	T100/T200	46	250	95	2.5
756872015	75/150:5	2.4/1.2	15	28.5	0.3B-1.8/0.3B1.8	T100/T200	46	250	95	2.5
756872020	100/200:5	2.4/1.2	20	38	0.3B-1.8/0.3B1.8	T100/T200	46	250	95	2.5
756872030	150/300:5	2.4/1.2	30	57	0.3B-1.8/0.3B1.8	T100/T200	46	250	95	2.5
756872040	200/400:5	2.4/1.2	40	76	0.3B-1.8/0.3B1.8	T100/T200	46	250	95	2.5
756872060	300/600:5	2.4/1.2	60	86.7	0.3B-1.8/0.3B1.8	T100/T200	46	250	95	2.5
756872080	400/800:5	2.4/1.2	60	114	0.3B-1.8/0.3B1.8	T100/T200	46	250	95	2.5
756872100	500/1000:5	2.4/1.2	75	142.5	0.3B-1.8/0.3B1.8	T100/T200	46	250	95	2.5
756872120	600/1200:5	2.4/1.2	90	171	0.3B-1.8/0.3B1.8	T100/T200	46	250	95	2.5
High Accuracy Extended Range 1% nominal current to Rating Factor										
756876040	200:5	1.5	16	40	0.15 B-1.8	-	46	250	95	2.5
756876120	600:5	1.5	48	120	0.15 B-1.8	-	46	250	95	2.5
756876200	1000:5	1.5	50	125	0.15 B-1.8	-	46	250	95	2.5
756876240	1200:5	1.5	96	240	0.15 B-1.8	-	46	250	95	2.5

*** For HCEP Option add (–H) to the end of the code number.**
Additional ratings available upon request.

Notes:

CRK-52

46 kV CURRENT TRANSFORMER

OUTDOOR
60 Hertz

ARTECHE CR series are dry type outdoor service current transformers. The core is encapsulated with Type B epoxy resin which provides excellent internal dielectric properties and mechanical strength. The external layer of Cycloaliphatic Epoxy Resin (CEP) provides resistance to ultraviolet rays and the effects of tracking and erosion on the exterior of the transformer ensuring a long mechanical and electrical life. The transformer is maintenance free.

The external layer can be manufactured with Hydrophobic Cycloaliphatic Epoxy Resin (HCEP) which improves service life expectancy due to its improved tracking and erosion resistance. HCEP additionally increases the transformer's weatherability and offers better performance in heavily polluted environments.

The core is built with high permeability grain oriented silicon steel laminations for low losses. The windings are copper wire with copper plate double isolation. The concentric distribution of the coils prevents magnetic flux leakage, achieving greater accuracy and higher capacity to withstand mechanical stresses in adverse operating conditions.

Partial Discharge measurements exceed the IEEE, CAN/CSA and IEC requirements.

Mechanical characteristics

Insulation Material	Colors	Weight (lbs.)	Creepage distance (in)	Strike distance (in)
Resin	Gray*	458	63.62	19.7

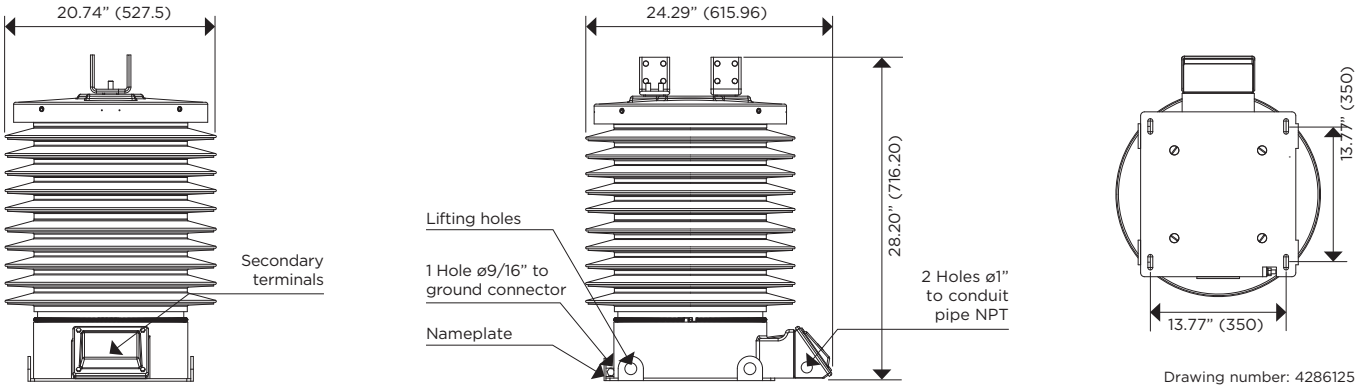

Drawing number: 4286125

CONNECTIONS

PRIMARY TERMINAL

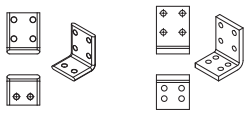

1500 A 2000 A

Type: NEMA-4
Material: Copper

GROUND CONNECTOR

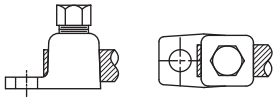

Type: LZ-250
Material: Copper
Range: 4TRE-250MCM

SECONDARY TERMINAL

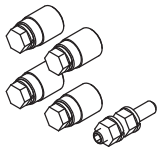

Type: Hex screw
Material: Steel

MARKING (Single Primary Ratio)

ONE SECONDARY

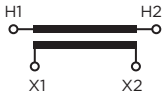

ONE SECONDARY with tap

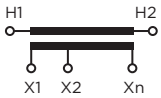

Approximate dimensions in inches (mm).
* Brown color available upon request

CRK-52

46 kV CURRENT TRANSFORMER

Electrical characteristics

Code * (CEP)	Current Ratio (Primary: Secondary) (A)	Continuous Thermal Current Rating Factor @ 30°C	Short-time Thermal Current (kA/1s)	Short-time Mechanical Current (kA_{peak})	IEEE Metering Accuracy	Relay Accuracy	Nominal Voltage System (kV)	BIL (kV)	Power-Frequency Withstand Voltage (1 min)	
									Primary & Secondary (kV_{rms})	Secondary Winding (kV_{rms})
756922005	25/50:5	3.0/1.5	5	9.5	0.3B-1.8/0.3B1.8	T200/T400	46	250	95	2.5
756922006	30/60:5	3.0/1.5	6	11.4	0.3B-1.8/0.3B1.8	T200/T400	46	250	95	2.5
756922010	50/100:5	3.0/1.5	10	19	0.3B-1.8/0.3B1.8	T200/T400	46	250	95	2.5
756922015	75/150:5	3.0/1.5	15	28.5	0.3B-1.8/0.3B1.8	T200/T400	46	250	95	2.5
756922020	100/200:5	3.0/1.5	20	38	0.3B-1.8/0.3B1.8	T200/T400	46	250	95	2.5
756922030	150/300:5	3.0/1.5	30	57	0.3B-1.8/0.3B1.8	T200/T400	46	250	95	2.5
756922040	200/400:5	3.0/1.5	40	76	0.3B-1.8/0.3B1.8	T200/T400	46	250	95	2.5
756922060	300/600:5	3.0/1.5	60	86.7	0.3B-1.8/0.3B1.8	T200/T400	46	250	95	2.5
756922080	400/800:5	3.0/1.5	60	114	0.3B-1.8/0.3B1.8	T200/T400	46	250	95	2.5
756922100	500/1000:5	3.0/1.5	75	142.5	0.3B-1.8/0.3B1.8	T200/T400	46	250	95	2.5
756922120	600/1200:5	3.0/1.5	90	171	0.3B-1.8/0.3B1.8	T200/T400	46	250	95	2.5
756922150	750/1500:5	3.0/1.5	90	171	0.3B-1.8/0.3B1.8	T200/T400	46	250	95	2.5
756922200	1000/2000:5	2.4/1.2	90	171	0.3B-1.8/0.3B1.8	T200/T400	46	250	95	2.5

*** For HCEP Option add (–H) to the end of the code number.**
Additional ratings available upon request.

Notes:

CE-069

69 kV CURRENT TRANSFORMER

OUTDOOR
60 Hertz

ARTECHE CE series are dry type outdoor service top-core current transformers. The core is encapsulated with Type B epoxy resin which provides excellent internal dielectric properties and mechanical strength. The external layer of Cycloaliphatic Epoxy Resin (CEP) provides resistance to ultraviolet rays and the effects of tracking and erosion on the exterior of the transformer ensuring a long mechanical and electrical life. The transformer is maintenance free.

The external layer can be manufactured with Hydrophobic Cycloaliphatic Epoxy Resin (HCEP) which improves service life expectancy due to its improved tracking and erosion resistance. HCEP additionally increases the transformer's weatherability and offers better performance in heavily polluted environments.

The core is built with high permeability grain oriented silicon steel laminations for low losses. The windings are copper wire with copper plate double isolation. The concentric distribution of the coils prevents magnetic flux leakage, achieving greater accuracy and higher capacity to withstand mechanical stresses in adverse operating conditions. The cores and windings are located in the upper part of the transformer. This head is coated with a conductive layer, which provides an adequate electric field control.

Partial Discharge measurements exceed the IEEE, CAN/CSA and IEC requirements.

Mechanical characteristics

Insulation Material	Colors	Weight (lbs.)	Creepage distance (in)	Strike distance (in)
Resin	Gray*	771	109.4	33

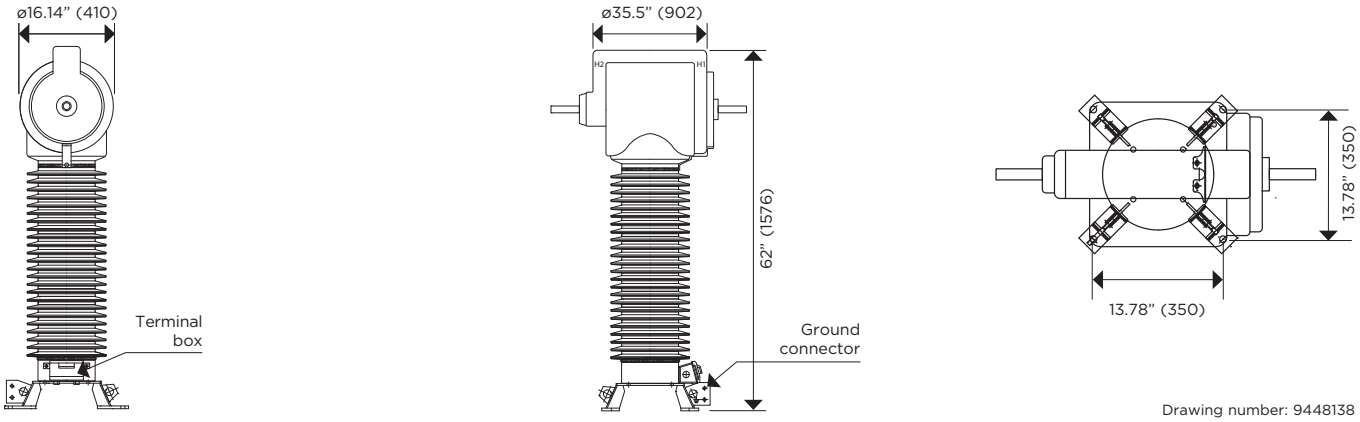

Drawing number: 9448138

CONNECTIONS

PRIMARY TERMINAL

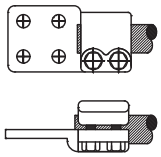

Type: PM30MC0-1-4N-E
Material: Aluminum

GROUND CONNECTOR

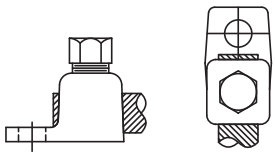

Type: LZ-500
Material: Copper
Range: 4/OTRE-500MCM

SECONDARY TERMINAL

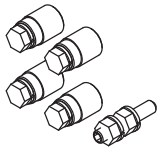

Type: Hex screw
Material: Steel

MARKING (Single Primary Ratio)

ONE SECONDARY

ONE SECONDARY with tap

Approximate dimensions in inches (mm).
* Brown color available upon request

CE-069

69 kV CURRENT TRANSFORMER

Electrical characteristics

Code * (CEP)	Current Ratio (Primary: Secondary) (A)	Continuous Thermal Current Rating Factor @ 30°C	Short-time Thermal Current (kA/1s)	Short-time Mechanical Current (kA_{peak})	IEEE Metering Accuracy	Relay Accuracy	Nominal Voltage System (kV)	BIL (kV)	Power-Frequency Withstand Voltage (1 min)	
									Primary & Secondary (kV_{rms})	Secondary Winding (kV_{rms})
756172005	25/50:5	2.4/1.2	5	9.5	0.3B-1.8/0.3B1.8	T200/T400	69	350	140	2.5
756172006	30/60:5	2.4/1.2	6	11.4	0.3B-1.8/0.3B1.8	T200/T400	69	350	140	2.5
756172010	50/100:5	2.4/1.2	10	19	0.3B-1.8/0.3B1.8	T200/T400	69	350	140	2.5
756172015	75/150:5	2.4/1.2	15	28.5	0.3B-1.8/0.3B1.8	T200/T400	69	350	140	2.5
756172020	100/200:5	2.4/1.2	20	38	0.3B-1.8/0.3B1.8	T200/T400	69	350	140	2.5
756172030	150/300:5	2.4/1.2	30	57	0.3B-1.8/0.3B1.8	T200/T400	69	350	140	2.5
756172040	200/400:5	2.4/1.2	40	76	0.3B-1.8/0.3B1.8	T200/T400	69	350	140	2.5
756172060	300/600:5	2.4/1.2	60	86.7	0.3B-1.8/0.3B1.8	T200/T400	69	350	140	2.5
756172080	400/800:5	2.4/1.2	60	114	0.3B-1.8/0.3B1.8	T200/T400	69	350	140	2.5
756172100	500/1000:5	2.4/1.2	75	142.5	0.3B-1.8/0.3B1.8	T200/T400	69	350	140	2.5
756172120	600/1200:5	2.4/1.2	90	171	0.3B-1.8/0.3B1.8	T200/T400	69	350	140	2.5
756172150	750/1500:5	2.4/1.2	90	171	0.3B-1.8/0.3B1.8	T200/T400	69	350	140	2.5
756172200	1000/2000:5	2.4/1.2	90	171	0.3B-1.8/0.3B1.8	T400/T800	69	350	140	2.5
756172300	1500/3000:5	2.4/1.2	90	171	0.3B-1.8/0.3B1.8	T400/T800	69	350	140	2.5
High Accuracy Extended Range 1% nominal current to Rating Factor										
756176040	200:5	1.5	16	40	0.15 B-1.8	-	69	350	140	2.5
756176120	600:5	1.5	48	120	0.15 B-1.8	-	69	350	140	2.5
756176200	1000:5	1.5	50	125	0.15 B-1.8	-	69	350	140	2.5
756176240	1200:5	1.5	96	240	0.15 B-1.8	-	69	350	140	2.5

*** For HCEP Option add (–H) to the end of the code number.**
Additional ratings available upon request.

Notes:

CRH-72

69 kV CURRENT TRANSFORMER

OUTDOOR
60 Hertz

ARTECHE CR series are dry type outdoor service current transformers. The core is encapsulated with Type B epoxy resin which provides excellent internal dielectric properties and mechanical strength. The external layer of Cycloaliphatic Epoxy Resin (CEP) provides resistance to ultraviolet rays and the effects of tracking and erosion on the exterior of the transformer ensuring a long mechanical and electrical life. The transformer is maintenance free.

The external layer can be manufactured with Hydrophobic Cycloaliphatic Epoxy Resin (HCEP) which improves service life expectancy due to its improved tracking and erosion resistance. HCEP additionally increases the transformer's weatherability and offers better performance in heavily polluted environments.

The core is built with high permeability grain oriented silicon steel laminations for low losses. The windings are copper wire with copper plate double isolation. The concentric distribution of the coils prevents magnetic flux leakage, achieving greater accuracy and higher capacity to withstand mechanical stresses in adverse operating conditions.

Partial Discharge measurements exceed the IEEE, CAN/CSA and IEC requirements.

Mechanical characteristics

Insulation Material	Colors	Weight (lbs.)	Creepage distance (in)	Strike distance (in)
Resin	Gray*	298	74.8	26

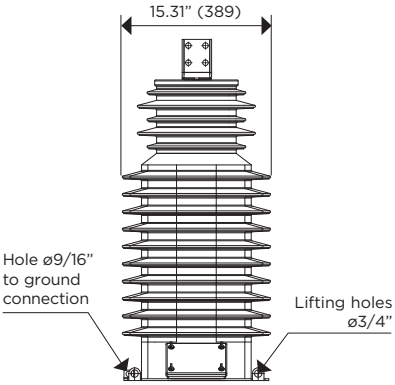

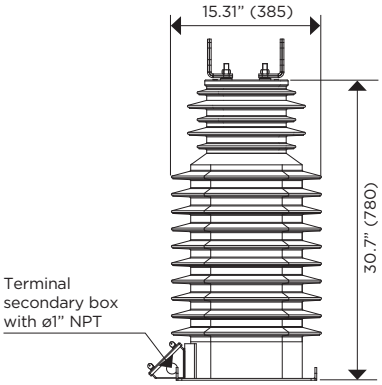

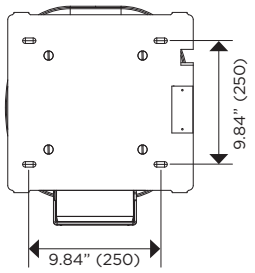

Drawing number: 4286123

CONNECTIONS

PRIMARY TERMINAL

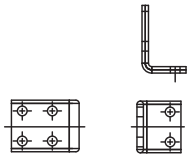

Type: NEMA-4
Material: Copper

GROUND CONNECTOR

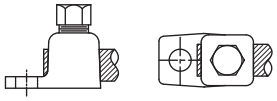

Type: LZ-250
Material: Copper
Range: 4TRE-250MCM

SECONDARY TERMINAL

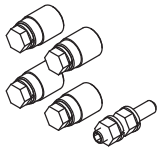

Type: Hex screw
Material: Steel

MARKING (Single Primary Ratio)

ONE SECONDARY

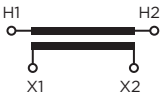

ONE SECONDARY with tap

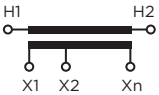

Approximate dimensions in inches (mm).
* Brown color available upon request

CRH-72

69 kV CURRENT TRANSFORMER

Electrical characteristics

Code * (CEP)	Current Ratio (Primary: Secondary) (A)	Continuous Thermal Current Rating Factor @ 30°C	Short-time Thermal Current (kA/1s)	Short-time Mechanical Current (kA_{peak})	IEEE Metering Accuracy	Relay Accuracy	Nominal Voltage System (kV)	BIL (kV)	Power-Frequency Withstand Voltage (1 min)	
									Primary & Secondary (kV_{rms})	Secondary Winding (kV_{rms})
756892005	25/50:5	2.4/1.2	5	9.5	0.3B-1.8/0.3B1.8	T100/T200	69	350	140	2.5
756892006	30/60:5	2.4/1.2	6	11.4	0.3B-1.8/0.3B1.8	T100/T200	69	350	140	2.5
756892010	50/100:5	2.4/1.2	10	19	0.3B-1.8/0.3B1.8	T100/T200	69	350	140	2.5
756892015	75/150:5	2.4/1.2	15	28.5	0.3B-1.8/0.3B1.8	T100/T200	69	350	140	2.5
756892020	100/200:5	2.4/1.2	20	38	0.3B-1.8/0.3B1.8	T100/T200	69	350	140	2.5
756892030	150/300:5	2.4/1.2	30	57	0.3B-1.8/0.3B1.8	T100/T200	69	350	140	2.5
756892040	200/400:5	2.4/1.2	40	76	0.3B-1.8/0.3B1.8	T100/T200	69	350	140	2.5
756892060	300/600:5	2.4/1.2	60	86.7	0.3B-1.8/0.3B1.8	T100/T200	69	350	140	2.5
756892080	400/800:5	2.4/1.2	60	114	0.3B-1.8/0.3B1.8	T100/T200	69	350	140	2.5
756892100	500/1000:5	2.4/1.2	75	142.5	0.3B-1.8/0.3B1.8	T100/T200	69	350	140	2.5
756892120	600/1200:5	2.4/1.2	90	171	0.3B-1.8/0.3B1.8	T100/T200	69	350	140	2.5
High Accuracy Extended Range 1% nominal current to Rating Factor										
756176040	200:5	1.5	16	40	0.15 B-1.8	-	69	350	140	2.5
756176120	600:5	1.5	48	120	0.15 B-1.8	-	69	350	140	2.5
756176200	1000:5	1.5	50	125	0.15 B-1.8	-	69	350	140	2.5
756176240	1200:5	1.5	96	240	0.15 B-1.8	-	69	350	140	2.5

*** For HCEP Option add (–H) to the end of the code number.**
Additional ratings available upon request.

Notes:

CRK-72

69 kV CURRENT TRANSFORMER

OUTDOOR
60 Hertz

ARTECHE CR series are dry type outdoor service current transformers. The core is encapsulated with Type B epoxy resin which provides excellent internal dielectric properties and mechanical strength. The external layer of Cycloaliphatic Epoxy Resin (CEP) provides resistance to ultraviolet rays and the effects of tracking and erosion on the exterior of the transformer ensuring a long mechanical and electrical life. The transformer is maintenance free.

The external layer can be manufactured with Hydrophobic Cycloaliphatic Epoxy Resin (HCEP) which improves service life expectancy due to its improved tracking and erosion resistance. HCEP additionally increases the transformer's weatherability and offers better performance in heavily polluted environments.

The core is built with high permeability grain oriented silicon steel laminations for low losses. The windings are copper wire with copper plate double isolation. The concentric distribution of the coils prevents magnetic flux leakage, achieving greater accuracy and higher capacity to withstand mechanical stresses in adverse operating conditions.

Partial Discharge measurements exceed the IEEE, CAN/CSA and IEC requirements.

Mechanical characteristics

Insulation Material	Colors	Weight (lbs.)	Creepage distance (in)	Strike distance (in)
Resin	Gray*	518	91.2	26.2

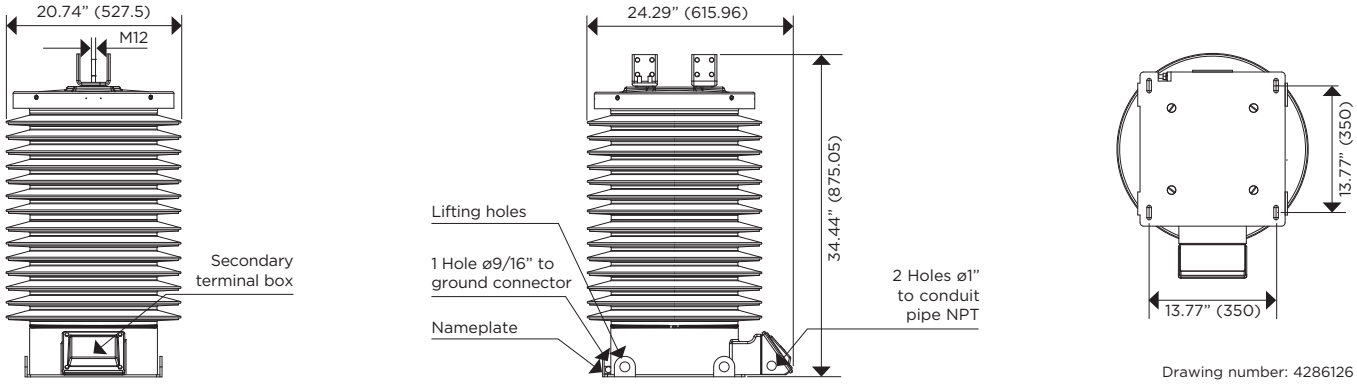

Drawing number: 4286126

CONNECTIONS

PRIMARY TERMINAL

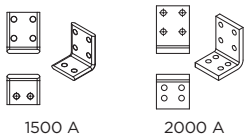

Type: NEMA-4
Material: Copper

GROUND CONNECTOR

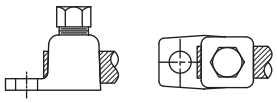

Type: LZ-250
Material: Copper
Range: 4TRE-250MCM

SECONDARY TERMINAL

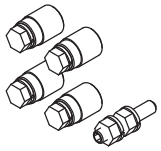

Type: Hex screw
Material: Steel

MARKING (Single Primary Ratio)

ONE SECONDARY

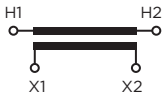

ONE SECONDARY with tap

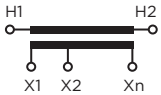

Approximate dimensions in inches (mm).
* Brown color available upon request

CRK-72

69 kV CURRENT TRANSFORMER

Electrical characteristics

Code * (CEP)	Current Ratio (Primary: Secondary) (A)	Continuous Thermal Current Rating Factor @ 30°C	Short-time Thermal Current (kA/1s)	Short-time Mechanical Current (kA_{peak})	IEEE Metering Accuracy	Relay Accuracy	Nominal Voltage System (kV)	BIL (kV)	Power-Frequency Withstand Voltage (1 min)	
									Primary & Secondary (kV_{rms})	Secondary Winding (kV_{rms})
756932005	25/50:5	2.4/1.2	5	9.5	0.3B-1.8/0.3B1.8	T200/T400	69	350	140	2.5
756932006	30/60:5	2.4/1.2	6	11.4	0.3B-1.8/0.3B1.8	T200/T400	69	350	140	2.5
756932010	50/100:5	2.4/1.2	10	19	0.3B-1.8/0.3B1.8	T200/T400	69	350	140	2.5
756932015	75/150:5	2.4/1.2	15	28.5	0.3B-1.8/0.3B1.8	T200/T400	69	350	140	2.5
756932020	100/200:5	2.4/1.2	20	38	0.3B-1.8/0.3B1.8	T200/T400	69	350	140	2.5
756932030	150/300:5	2.4/1.2	30	57	0.3B-1.8/0.3B1.8	T200/T400	69	350	140	2.5
756932040	200/400:5	2.4/1.2	40	76	0.3B-1.8/0.3B1.8	T200/T400	69	350	140	2.5
756932060	300/600:5	2.4/1.2	60	86.7	0.3B-1.8/0.3B1.8	T200/T400	69	350	140	2.5
756932080	400/800:5	2.4/1.2	60	114	0.3B-1.8/0.3B1.8	T200/T400	69	350	140	2.5
756932100	500/1000:5	2.4/1.2	75	142.5	0.3B-1.8/0.3B1.8	T200/T400	69	350	140	2.5
756932120	600/1200:5	2.4/1.2	90	171	0.3B-1.8/0.3B1.8	T200/T400	69	350	140	2.5
756932150	750/1500:5	2.4/1.2	90	171	0.3B-1.8/0.3B1.8	T400/T800	69	350	140	2.5
756932200	1000/2000:5	2.4/1.2	90	171	0.3B-1.8/0.3B1.8	T400/T800	69	350	140	2.5

*** For HCEP Option add (–H) to the end of the code number.**
Additional ratings available upon request.

Notes:

KM-15

15 kV COMBINED TRANSFORMER

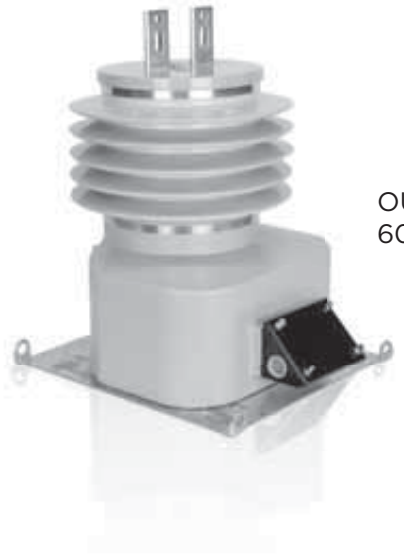

OUTDOOR
60 Hertz

ARTECHE KM series are dry type outdoor service combination CT-PT. The core is encapsulated with Type B epoxy resin which provides excellent internal dielectric properties and mechanical strength. The external layer of Cycloaliphatic Epoxy Resin (CEP) provides resistance to ultraviolet rays and the effects of tracking and erosion on the exterior of the transformer ensuring a long mechanical and electrical life. The transformer is maintenance free.

The external layer can be manufactured with Hydrophobic Cycloaliphatic Epoxy Resin (HCEP) which improves service life expectancy due to its improved tracking and erosion resistance. HCEP additionally increases the transformer's weatherability and offers better performance in heavily polluted environments.

The core is built with high permeability grain oriented silicon steel laminations for low losses. The windings are copper wire with copper plate double isolation. The concentric distribution of the coils prevents magnetic flux leakage, achieving greater accuracy and higher capacity to withstand mechanical stresses in adverse operating conditions.

Partial Discharge measurements exceed the IEEE, CAN/CSA and IEC requirements.

Mechanical characteristics

Insulation Material	Colors	Weight (lbs.)	Creepage distance (in)	Strike distance (in)
Resin	Gray*	209	23.7	13

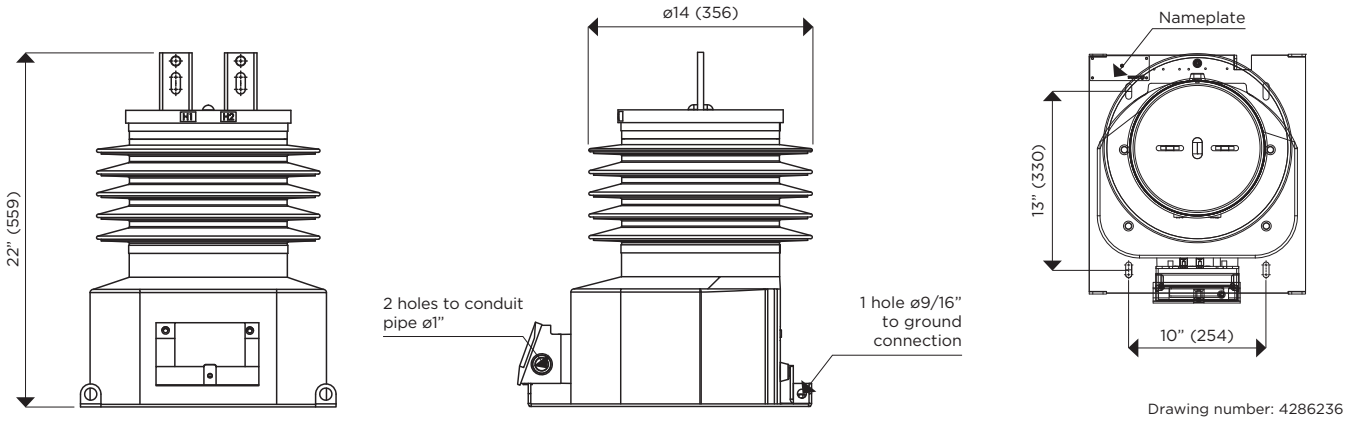

Drawing number: 4286236

CONNECTIONS

PRIMARY TERMINAL

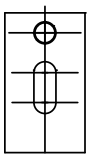

Type: NEMA-2
Material: Copper

GROUND CONNECTOR

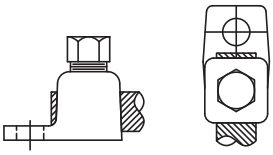

Type: TE-12 250
Material: Copper
Range: 4TRE-250MCM

SECONDARY TERMINAL

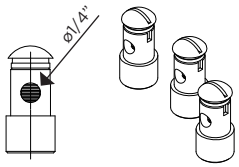

Type: Quick Connector
Material: Brass

MARKING (Single Primary Ratio)

ONE SECONDARY

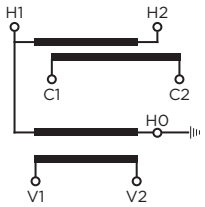

ONE SECONDARY with tap

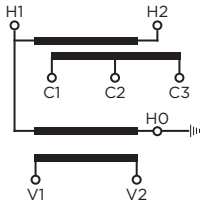

Approximate dimensions in inches (mm).
*Brown color available upon request

KM-15

15 kV COMBINED TRANSFORMER

Electrical characteristics

Code * (CEP)	Current Ratio (Primary: Secondary)	Continuous Thermal Current Rating Factor @ 30°C	Short-time Thermal Current (kA/1s)	Short-time Mechanical Current (kA_{peak})	IEEE Metering Accuracy [Current Transformer]	IEEE Metering Accuracy [Voltage Transformer]	Nominal Voltage System (kV)	BIL (kV)	Power-Frequency Withstand Voltage (1 min)	
									Primary & Secondary (kV_{rms})	Secondary Winding (kV_{rms})
770083011	5:5	3.0	0,5	1.4	0.3 B-0.5	0.3 W,X,M,Y/0.6Z	15	110	34	2.5
770083021	10:5	3.0	1	2.7	0.3 B-0.5	0.3 W,X,M,Y/0.6Z	15	110	34	2.5
770083031	15:5	3.0	1.5	4.1	0.3 B-0.5	0.3 W,X,M,Y/0.6Z	15	110	34	2.5
770083041	20:5	3.0	2	5.4	0.3 B-0.5	0.3 W,X,M,Y/0.6Z	15	110	34	2.5
770083051	25:5	3.0	2.5	6.8	0.3 B-0.5	0.3 W,X,M,Y/0.6Z	15	110	34	2.5
770083061	30:5	3.0	3	8.1	0.3 B-0.5	0.3 W,X,M,Y/0.6Z	15	110	34	2.5
770083071	40:5	3.0	4	10.8	0.3 B-0.5	0.3 W,X,M,Y/0.6Z	15	110	34	2.5
770083081	50:5	3.0	5	13.5	0.3 B-0.5	0.3 W,X,M,Y/0.6Z	15	110	34	2.5
770083091	75:5	3.0	7.5	20.3	0.3 B-0.5	0.3 W,X,M,Y/0.6Z	15	110	34	2.5
770083101	100:5	3.0	10	27	0.3 B-0.5	0.3 W,X,M,Y/0.6Z	15	110	34	2.5
770083111	150:5	3.0	15	40.5	0.3 B-0.5	0.3 W,X,M,Y/0.6Z	15	110	34	2.5
770083121	200:5	3.0	20	54	0.3 B-0.5	0.3 W,X,M,Y/0.6Z	15	110	34	2.5
770083131	300:5	3.0	30	81	0.3 B-0.5	0.3 W,X,M,Y/0.6Z	15	110	34	2.5
770083141	400:5	3.0	40	108	0.3 B-0.5	0.3 W,X,M,Y/0.6Z	15	110	34	2.5
770083151	600:5	2.0	60	162	0.3 B-0.5	0.3 W,X,M,Y/0.6Z	15	110	34	2.5
770083161	800:5	1.5	60	162	0.3 B-0.5	0.3 W,X,M,Y/0.6Z	15	110	34	2.5
770083171	1000:5	1.2	60	162	0.3 B-0.5	0.3 W,X,M,Y/0.6Z	15	110	34	2.5
770083181	1200:5	1.0	60	162	0.3 B-0.5	0.3 W,X,M,Y/0.6Z	15	110	34	2.5
770084041	10/20:5	2.0/1.5	2	5	0.3 B0.2/B-0.5	0.3 W,X,M,Y/0.6Z	15	110	34	2.5
770084081	25/50:5	2.0/1.5	5	12.5	0.3 B0.2/B-0.5	0.3 W,X,M,Y/0.6Z	15	110	34	2.5
770084121	100/200:5	2.0/1.5	20	50	0.3 B0.2/B-0.5	0.3 W,X,M,Y/0.6Z	15	110	34	2.5
770084151	300/600:5	2.0/1.5	60	150	0.3 B0.2/B-0.5	0.3 W,X,M,Y/0.6Z	15	110	34	2.5
770084161	400/800:5	2.0/1.5	60	150	0.3 B0.2/B-0.5	0.3 W,X,M,Y/0.6Z	15	110	34	2.5
770083161	400/800:5	3.0/1.5	60	150	0.3 B0.2/B-0.5	0.3 W,X,M,Y/0.6Z	15	110	34	2.5
770084171	500/1000:5	2.0/1.2	75	127.5	0.3 B0.2/B-0.5	0.3 W,X,M,Y/0.6Z	15	110	34	2.5
770084181	600/1200:5	2.0/1.0	90	162	0.3 B0.2/B-0.5	0.3 W,X,M,Y/0.6 Z	15	110	34	2.5
High Accuracy Extended Range 1% nominal current to Rating Factor										
770087121	200:5	3.0	20	50	0.15 B-0.5	0.3 W,X,M,Y/0.6Z	15	110	34	2.5
770088121	200:5	1.5	20	50	0.15 B-1.8	0.3 W,X,M,Y/0.6Z	15	110	34	2.5
770088171	1000:5	1.5	75	127.5	0.15 B-1.8	0.3 W,X,M,Y/0.6Z	15	110	34	2.5

*** For HCEP Option add (–H) to the end of the code number.**
Additional ratings available upon request.

Voltage Ratings

VT Ratio	Primary (V)	Secondary (V)	Thermal Burden (VA)	Continuous Rated Voltage Factor (Un)	Rated Voltage Factor 30s (Un)
60:1	7200/12470GY	120	750	1.25	1.5

Additional VT ratios are available. Please contact Arteche for details.

Notes:

.....

.....

.....

.....

.....

.....

MK-15

15 kV METERING UNIT

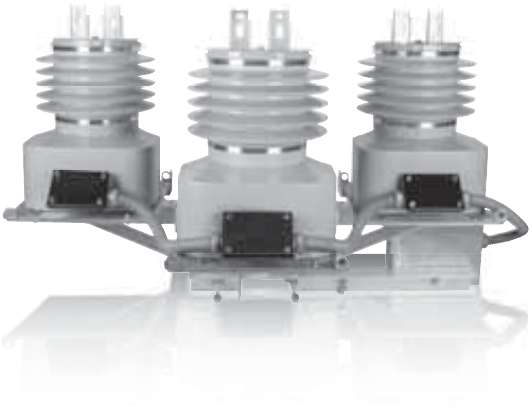

OUTDOOR
60 Hertz

ARTECHE ME/MK series metering units are outdoor, three-phase, pole-mounted metering racks.

The rack is made of lightweight aluminium designed to mount on poles in an upright position. It includes two galvanized steel mounting bolts for attaching the metering unit to the pole, with pole diameters available from 8” to 14”. Optional galvanized steel structures and/or other pole diameters are available upon request.

MK series incorporate 3 combined transformers mounted vertically. Their core is encapsulated with Type B epoxy resin which provides excellent internal dielectric properties and mechanical strength. The external layer of Cycloaliphatic Epoxy Resin (CEP) provides resistance to ultraviolet rays and the effects of tracking and erosion on the exterior of the transformer ensuring a long mechanical and electrical life. The transformer is maintenance free.

The external layer can be manufactured with Hydrophobic Cycloaliphatic Epoxy Resin (HCEP) which improves service life expectancy due to its improved tracking and erosion resistance. HCEP additionally increases the transformer’s weatherability and offers better performance in heavily polluted environments.

The core is built with high permeability grain oriented silicon steel laminations for low losses. The windings are copper wire with copper plate double isolation. The concentric distribution of the coils prevents magnetic flux leakage, achieving greater accuracy and higher capacity to withstand mechanical stresses in adverse operating conditions.

Partial Discharge measurements exceed the IEEE, CAN/CSA and IEC requirements.

Mechanical characteristics

Insulation Material	Colors	Weight (lbs.)	Creepage distance (in)	Strike distance (in)
Resin	Gray*	692	23.7	13

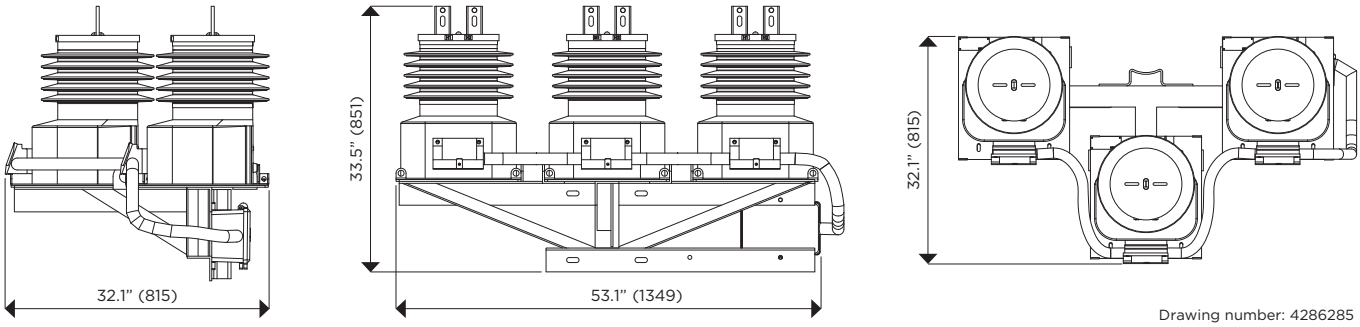

Drawing number: 4286285

CONNECTIONS

PRIMARY TERMINAL

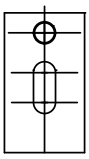

Type: NEMA-2
Material: Copper

GROUND CONNECTOR

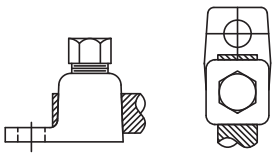

Type: TE-12 250 • Material: Copper
Range: 4TRE-250MCM

SECONDARY TERMINAL

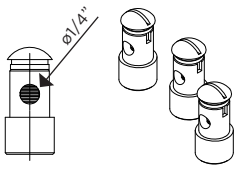

Type: Quick Connector • Material: Brass

MARKING

CONNECTION PLATE

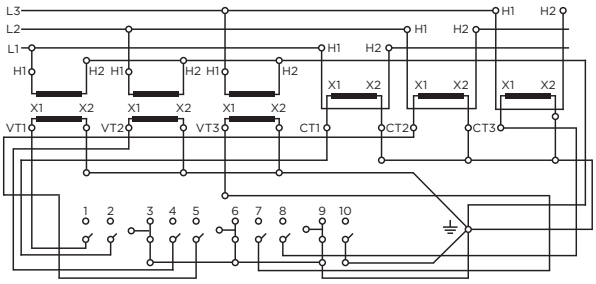

Approximate dimensions in inches (mm).
*Brown color available upon request

MK-15

15 kV METERING UNIT

Electrical characteristics

Code * (CEP)	Current Ratio (Primary: Secondary)	Continuous Thermal Current Rating Factor @ 30°C	Short-time Thermal Current (kA/1s)	Short-time Mechanical Current (kA_{peak})	IEEE Metering Accuracy [Current Transformer]	IEEE Metering Accuracy [Voltage Transformer]	Nominal Voltage System (kV)	BIL (kV)	Power-Frequency Withstand Voltage (1 min)	
									Primary & Secondary (kV_{rms})	Secondary Winding (kV_{rms})
770663011	5:5	3.0	0,5	1.4	0.3 B-0.5	0.3 W,X,M,Y/0.6Z	15	110	34	2.5
770663021	10:5	3.0	1	2.7	0.3 B-0.5	0.3 W,X,M,Y/0.6Z	15	110	34	2.5
770663031	15:5	3.0	1.5	4.1	0.3 B-0.5	0.3 W,X,M,Y/0.6Z	15	110	34	2.5
770663041	20:5	3.0	2	5.4	0.3 B-0.5	0.3 W,X,M,Y/0.6Z	15	110	34	2.5
770663051	25:5	3.0	2.5	6.8	0.3 B-0.5	0.3 W,X,M,Y/0.6Z	15	110	34	2.5
770663061	30:5	3.0	3	8.1	0.3 B-0.5	0.3 W,X,M,Y/0.6Z	15	110	34	2.5
770663071	40:5	3.0	4	10.8	0.3 B-0.5	0.3 W,X,M,Y/0.6Z	15	110	34	2.5
770663081	50:5	3.0	5	13.5	0.3 B-0.5	0.3 W,X,M,Y/0.6Z	15	110	34	2.5
770663091	75:5	3.0	7.5	20.3	0.3 B-0.5	0.3 W,X,M,Y/0.6Z	15	110	34	2.5
770663101	100:5	3.0	10	27	0.3 B-0.5	0.3 W,X,M,Y/0.6Z	15	110	34	2.5
770663111	150:5	3.0	15	40.5	0.3 B-0.5	0.3 W,X,M,Y/0.6Z	15	110	34	2.5
770663121	200:5	3.0	20	54	0.3 B-0.5	0.3 W,X,M,Y/0.6Z	15	110	34	2.5
770663131	300:5	3.0	30	81	0.3 B-0.5	0.3 W,X,M,Y/0.6Z	15	110	34	2.5
770663141	400:5	3.0	40	108	0.3 B-0.5	0.3 W,X,M,Y/0.6Z	15	110	34	2.5
770663151	600:5	2.0	60	162	0.3 B-0.5	0.3 W,X,M,Y/0.6Z	15	110	34	2.5
770663161	800:5	1.5	60	162	0.3 B-0.5	0.3 W,X,M,Y/0.6Z	15	110	34	2.5
770663171	1000:5	1.2	60	162	0.3 B-0.5	0.3 W,X,M,Y/0.6Z	15	110	34	2.5
770663181	1200:5	1.0	60	162	0.3 B-0.5	0.3 W,X,M,Y/0.6Z	15	110	34	2.5
High Accuracy Extended Range 1% nominal current to Rating Factor										
770667121	200:5	3.0	20	50	0.15 B-0.5	0.3 W,X,M,Y/0.6Z	15	110	34	2.5
770668121	200:5	1.5	20	50	0.15 B-1.8	0.3 W,X,M,Y/0.6Z	15	110	34	2.5
770668171	1000:5	1.5	75	127.5	0.15 B-1.8	0.3 W,X,M,Y/0.6Z	15	110	34	2.5

*** For HCEP Option add (–H) to the end of the code number.**
Additional ratings available upon request.

Voltage Ratings

VT Ratio	Primary (V)	Secondary (V)	Thermal Burden (VA)	Continuous Rated Voltage Factor (Un)	Rated Voltage Factor 30s (Un)
60:1	7200/12470GY	120	750	1.25	1.5

Additional VT ratios are available. Please contact Arteche for details.

Notes:

.....

.....

.....

.....

.....

.....

.....

.....

.....

.....

.....

ME-015

15 kV METERING UNIT

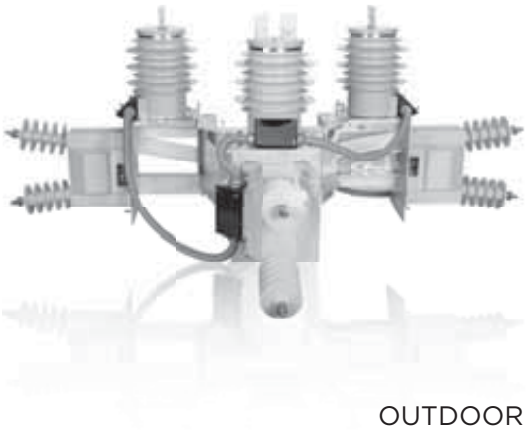

OUTDOOR
60 Hertz

ARTECHE ME/MK series metering units are outdoor. three-phase. pole-mounted metering racks.

The rack is made of lightweight aluminium designed to mount on poles in an upright position. It includes two galvanized steel mounting bolts for attaching the metering unit to the pole. with pole diameters available from 8” to 14”. Optional galvanized steel structures and/or other pole diameters are available upon request.

ME series incorporate 3 current transformers mounted vertically and 3 voltage transformers mounted horizontally. Their core is encapsulated with Type B epoxy resin which provides excellent internal dielectric properties and mechanical strength. The external layer of Cycloaliphatic Epoxy Resin (CEP) provides resistance to ultraviolet rays and the effects of tracking and erosion on the exterior of the transformer ensuring a long mechanical and electrical life. The transformer is maintenance free.

The external layer can be manufactured with Hydrophobic Cycloaliphatic Epoxy Resin (HCEP) which improves service life expectancy due to its improved tracking and erosion resistance. HCEP additionally increases the transformer’s weatherability and offers better performance in heavily polluted environments.

The core is built with high permeability grain oriented silicon steel laminations for low losses. The windings are copper wire with copper plate double isolation. The concentric distribution of the coils prevents magnetic flux leakage. achieving greater accuracy and higher capacity to withstand mechanical stresses in adverse operating conditions.

Partial Discharge measurements exceed the IEEE, CAN/CSA and IEC requirements.

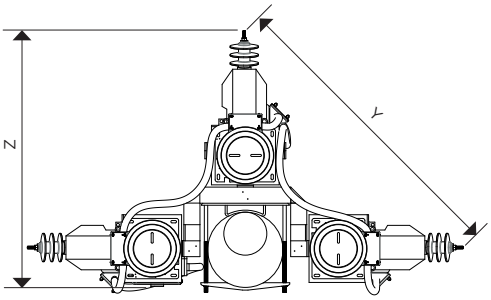

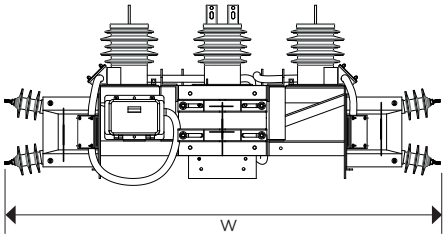

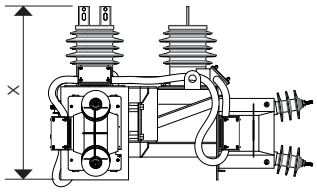

Drawing number: 4287215

	PRIMARY TERMINAL CT	PRIMARY TERMINAL VT	GROUND CONNECTOR	SECONDARY TERMINAL
CONNEC-TIONS	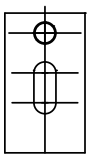	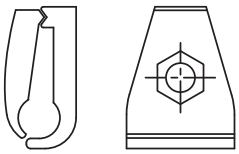	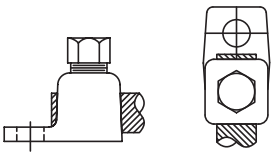	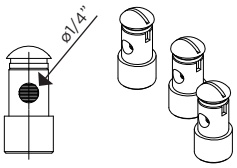
	Type: NEMA-2 Material: Copper	Type: TE-4T Material: Copper Range: 8SOL-4TRE	Type: TE-12-250 Material: Copper Range: 4TRE-250MCM	Type: Quick Connector Material: Brass

ME-015

15 kV METERING UNIT

Characteristics

Type	Transformers		Code * (CEP)		Dimensions (in)				Weigth with Aluminium rack (lb)
	Current	Potential	With FUSE in the secondary box	Without FUSE in the secondary box	W	X	Y	Z	
ME-015	CRB-17	URL-17	771000009	771000017	82	32.25	58	48.75	520
ME-015	CRB-17	VRL-17	771000010	771000018	81.19	32.25	57.43	48.31	531
ME-015	CRB-17	URJ-17	771000011	771000019	80.5	32.50	56.87	47.94	564
ME-015	CRB-17	VRJ-17	771000012	771000020	81	32.50	57.31	48.25	564
ME-015	CRE-17	URL-17	771000013	771000021	82	32.68	58	48.75	579
ME-015	CRE-17	VRL-17	771000014	771000022	81.19	32.68	57.43	48.31	590
ME-015	CRE-17	URJ-17	771000015	771000023	80.5	32.68	56.87	47.94	623
ME-015	CRE-17	VRJ-17	771000016	771000024	81	32.68	57.31	48.25	623

*** For HCEP Option add (–H) to the end of the code number.**
Approximate dimensions in inches.
For detail electric characteristics see particular instrument transformer detail in its data sheet within this publication.

Notes:

MI-015

15 kV METERING UNIT

OUTDOOR
60 Hertz

ARTECHE MI series metering units are outdoor, three-phase, pad-mounted cabinets.

The cabinet is made of #12 caliber stainless steel lamination (2.7 mm or 0.105 in) with Munsell Green #7GY 3.29/1.5 powder finish. The doors are pad-lockable with a three point latch and a penta-head bolt.

MI series incorporate 3 combined transformers. Their core is encapsulated with Type B epoxy resin which provides excellent internal dielectric properties and mechanical strength, ensuring a long mechanical and electrical life. The transformer is maintenance free.

The entire surface of the transformer is coated with a conductive layer that is intended to be solidly grounded when energized. This allows for compact mounting inside switchgear or enclosures.

The core is built with high permeability grain oriented silicon steel laminations for low losses. The windings are copper wire with copper plate double isolation. The concentric distribution of the coils prevents magnetic flux leakage, achieving greater accuracy and higher capacity to withstand mechanical stresses in adverse operating conditions.

Partial Discharge measurements exceed the IEEE, CAN/CSA and IEC requirements.

The primary bushing well connections are IEEE 386 compliant, rated 200 A loadbreak or 600 A non load-break.. The secondary terminals are pre-wired to a 10 position test switch and 9S meter socket in standard red/black colors.

Mechanical characteristics		
Material	Colors	Weight (lbs.)
Stainless steel	Munsell Green	992

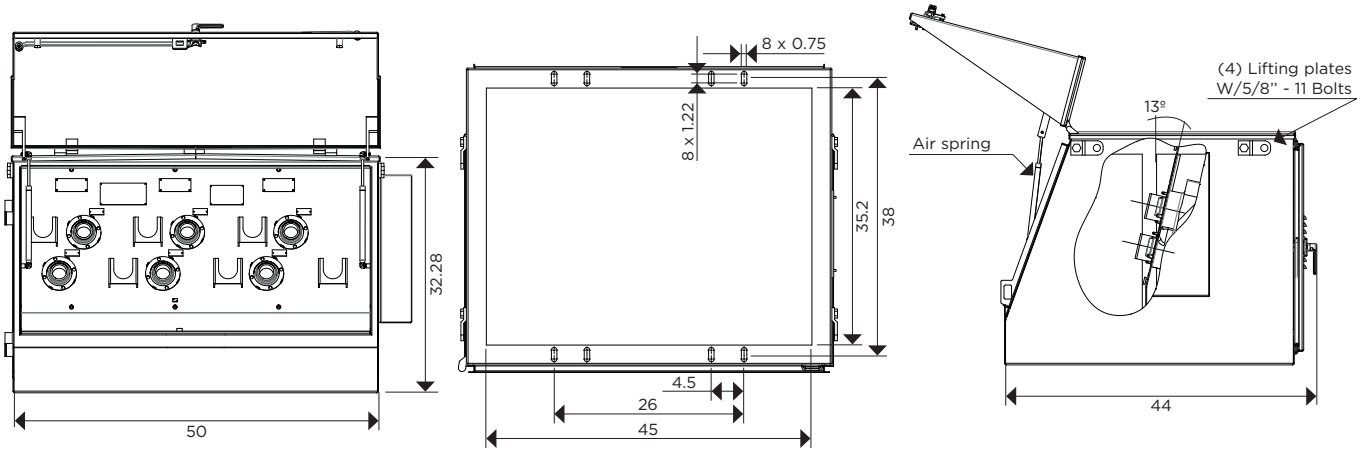

Drawing number: 4287010

MARKING

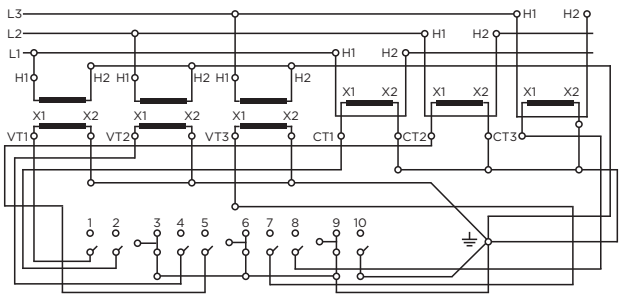

Approximate dimensions in inches (mm).

MI-015

15 kV METERING UNIT

Electrical characteristics

Code	Current Ratio (Primary: Secondary)	Continuous Thermal Current Rating Factor @ 30°C	Short-time Thermal Current (kA/1s)	Short-time Mechanical Current (kA_{peak})	IEEE Metering Accuracy [Current Transformer]	IEEE Metering Accuracy [Voltage Transformer]	Nominal Voltage System (kV)	BIL (kV)	Power-Frequency Withstand Voltage (1 min)	
									Primary & Secondary (kV_{rms})	Secondary Winding (kV_{rms})
770574011	5:5	2.0	0.5	1.25	0.3 B-0.5	0.3 W,X,M,Y/1.2Z	15	110	34	2.5
770574021	10:5	2.0	1	2.5	0.3 B-0.5	0.3 W,X,M,Y/1.2Z	15	110	34	2.5
770574031	15:5	2.0	1.5	3.75	0.3 B-0.5	0.3 W,X,M,Y/1.2Z	15	110	34	2.5
770574041	20:5	2.0	2	5	0.3 B-0.5	0.3 W,X,M,Y/1.2Z	15	110	34	2.5
770574051	25:5	2.0	2.5	6.25	0.3 B-0.5	0.3 W,X,M,Y/1.2Z	15	110	34	2.5
770574061	30:5	2.0	3	7.5	0.3 B-0.5	0.3 W,X,M,Y/1.2Z	15	110	34	2.5
770574081	40:5	2.0	4	10	0.3 B-0.5	0.3 W,X,M,Y/1.2Z	15	110	34	2.5
770574101	50:5	2.0	5	12.5	0.3 B-0.5	0.3 W,X,M,Y/1.2Z	15	110	34	2.5
770574151	75:5	2.0	7.5	18.75	0.3 B-0.5	0.3 W,X,M,Y/1.2Z	15	110	34	2.5
770574201	100:5	2.0	10	25	0.3 B-0.5	0.3 W,X,M,Y/1.2Z	15	110	34	2.5
770575301	150:5	1.33	10	25	0.3 B-0.5	0.3 W,X,M,Y/1.2Z	15	110	34	2.5
770575401	200:5	1.0	10	25	0.3 B-0.5	0.3 W,X,M,Y/1.2Z	15	110	34	2.5
770571131	300:5	1.5	30	75	0.3 B-0.5	0.3 W,X,M,Y/1.2Z	15	110	34	2.5
770571141	400:5	1.5	40	100	0.3 B-0.5	0.3 W,X,M,Y/1.2Z	15	110	34	2.5
770571151	600:5	1.0	60	150	0.3 B-0.5	0.3 W,X,M,Y/1.2Z	15	110	34	2.5
High Accuracy Extended Range 1% nominal current to Rating Factor										
770571101	100:5	2.0	10	25	0.15 B-0.5	0.3 W,X,M,Y/1.2Z	15	110	34	2.5
770571121	200:5	2.0	20	50	0.15 B-0.5	0.3 W,X,M,Y/1.2Z	15	110	34	2.5
770571151	600:5	1.0	48	120	0.15 B-0.5	0.3 W,X,M,Y/1.2Z	15	110	34	2.5

Additional ratings available upon request.

Voltage Ratings

VT Ratio	Primary (V)	Secondary (V)	Thermal Burden (VA)	Continuous Rated Voltage Factor (Un)	Rated Voltage Factor 30s (Un)
60:1	7200/12470GY	120	750	1.1	1.25

Additional VT ratios are available. Please contact Arteche for details.

Notes:

KM-25

25 kV COMBINED TRANSFORMER

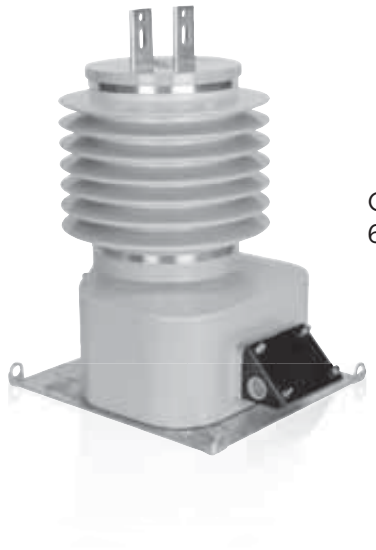

OUTDOOR
60 Hertz

ARTECHE KM series are dry type outdoor service combination CT-PT. The core is encapsulated with Type B epoxy resin which provides excellent internal dielectric properties and mechanical strength. The external layer of Cycloaliphatic Epoxy Resin (CEP) provides resistance to ultraviolet rays and the effects of tracking and erosion on the exterior of the transformer ensuring a long mechanical and electrical life. The transformer is maintenance free.

The external layer can be manufactured with Hydrophobic Cycloaliphatic Epoxy Resin (HCEP) which improves service life expectancy due to its improved tracking and erosion resistance. HCEP additionally increases the transformer's weatherability and offers better performance in heavily polluted environments.

The core is built with high permeability grain oriented silicon steel laminations for low losses. The windings are copper wire with copper plate double isolation. The concentric distribution of the coils prevents magnetic flux leakage, achieving greater accuracy and higher capacity to withstand mechanical stresses in adverse operating conditions.

Partial Discharge measurements exceed IEEE C57.13 2008 requirements

Mechanical characteristics

Insulation Material	Colors	Weight (lbs.)	Creepage distance (in)	Strike distance (in)
Resin	Gray*	230	32.6	16

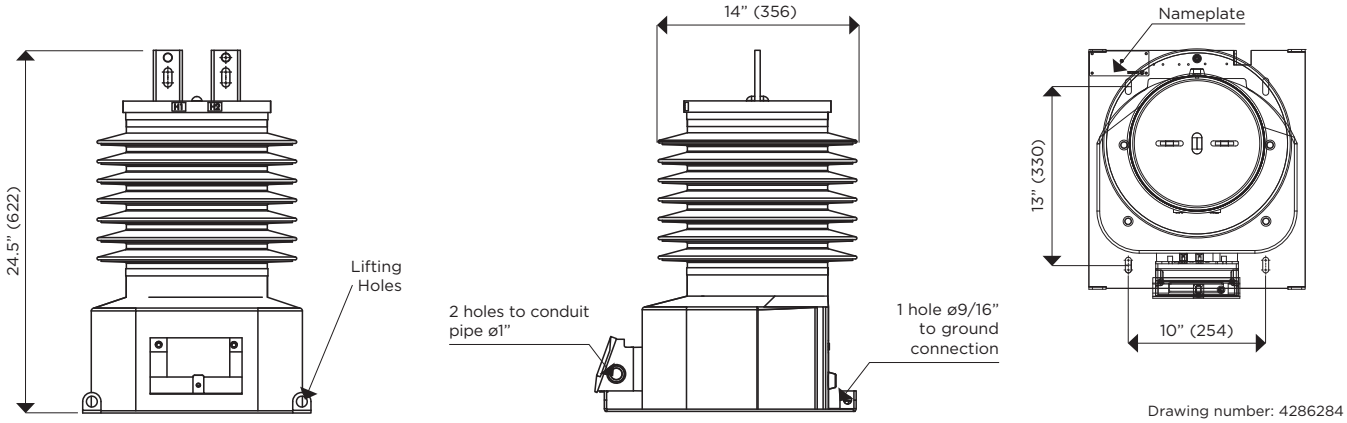

Drawing number: 4286284

CONNECTIONS

PRIMARY TERMINAL

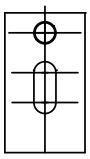

Type: NEMA-2
Material: Copper

GROUND CONNECTOR

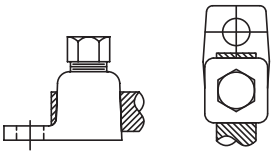

Type: TE-12 250
Material: Copper
Range: 4TRE-250MCM

SECONDARY TERMINAL

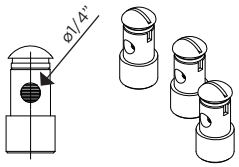

Type: Quick Connector
Material: Brass

MARKING (Single Primary Ratio)

ONE SECONDARY

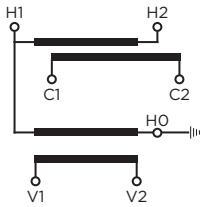

ONE SECONDARY with tap

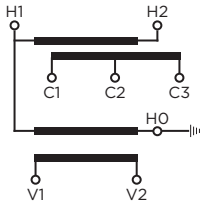

Approximate dimensions in inches (mm).
*Brown color available upon request

KM-25

25 kV COMBINED TRANSFORMER

Electrical characteristics

Code * (CEP)	Current Ratio (Primary: Secondary)	Continuous Thermal Current Rating Factor @ 30°C	Short-time Thermal Current (kA/1s)	Short-time Mechanical Current (kA_{peak})	IEEE Metering Accuracy [Current Transformer]	IEEE Metering Accuracy [Voltage Transformer]	Nominal Voltage System (kV)	BIL (kV)	Power-Frequency Withstand Voltage (1 min)	
									Primary & Secondary (kV_{rms})	Secondary Winding (kV_{rms})
770061016	5:5	1.5	0.5	1.4	0.3 B-0.5	0.3 W,X,M,Y/0.6Z	25	150	50	2.5
770061026	10:5	1.5	1	2.7	0.3 B-0.5	0.3 W,X,M,Y/0.6Z	25	150	50	2.5
770061036	15:5	1.5	1.5	4.1	0.3 B-0.5	0.3 W,X,M,Y/0.6Z	25	150	50	2.5
770061046	20:5	1.5	2	5.4	0.3 B-0.5	0.3 W,X,M,Y/0.6Z	25	150	50	2.5
770061056	25:5	1.5	2.5	6.8	0.3 B-0.5	0.3 W,X,M,Y/0.6Z	25	150	50	2.5
770061066	30:5	1.5	3	8.1	0.3 B-0.5	0.3 W,X,M,Y/0.6Z	25	150	50	2.5
770061076	40:5	1.5	4	10.8	0.3 B-0.5	0.3 W,X,M,Y/0.6Z	25	150	50	2.5
770061086	50:5	1.5	5	13.5	0.3 B-0.5	0.3 W,X,M,Y/0.6Z	25	150	50	2.5
770061096	75:5	1.5	7.5	20.3	0.3 B-0.5	0.3 W,X,M,Y/0.6Z	25	150	50	2.5
770061106	100:5	1.5	10	27	0.3 B-0.5	0.3 W,X,M,Y/0.6Z	25	150	50	2.5
770061116	150:5	1.5	15	40.5	0.3 B-0.5	0.3 W,X,M,Y/0.6Z	25	150	50	2.5
770061126	200:5	1.5	20	54	0.3 B-0.5	0.3 W,X,M,Y/0.6Z	25	150	50	2.5
770061136	300:5	1.5	30	81	0.3 B-0.5	0.3 W,X,M,Y/0.6Z	25	150	50	2.5
770061146	400:5	1.5	40	108	0.3 B-0.5	0.3 W,X,M,Y/0.6Z	25	150	50	2.5
770061156	600:5	1.0	60	162	0.3 B-0.5	0.3 W,X,M,Y/0.6Z	25	150	50	2.5
770061166	800:5	1.0	60	162	0.3 B-0.5	0.3 W,X,M,Y/0.6Z	25	150	50	2.5
770061176	1000:5	1.0	60	162	0.3 B-0.5	0.3 W,X,M,Y/0.6Z	25	150	50	2.5
770061186	1200:5	1.0	60	162	0.3 B-0.5	0.3 W,X,M,Y/0.6Z	25	150	50	2.5
770064046	10/20:5	2.0/1.5	2	5	0.3 B0.2/B-0.5	0.3 W,X,M,Y/0.6Z	25	150	50	2.5
770064086	25/50:5	2.0/1.5	5	12.5	0.3 B0.2/B-0.5	0.3 W,X,M,Y/0.6Z	25	150	50	2.5
770064126	100/200:5	2.0/1.5	20	50	0.3 B0.2/B-0.5	0.3 W,X,M,Y/0.6Z	25	150	50	2.5
770064136	150/300:5	2.0/1.5	30	75	0.3 B0.2/B-0.5	0.3 W,X,M,Y/0.6Z	25	150	50	2.5
770066136	150/300:5	4.0/2.0	30	75	0.3 B0.2/B-0.5	0.3 W,X,M,Y/0.6Z	25	150	50	2.5
770064156	300/600:5	2.0/1.5	60	150	0.3 B0.2/B-0.5	0.3 W,X,M,Y/0.6Z	25	150	50	2.5
770064176	500/1000:5	2.0/1.2	75	127.5	0.3 B0.2/B-0.5	0.3 W,X,M,Y/0.6Z	25	150	50	2.5
770064186	600/1200:5	2.0/1.0	90	162	0.3 B0.2/B-0.5	0.3 W,X,M,Y/0.6Z	25	150	50	2.5
High Accuracy Extended Range 1% nominal current to Rating Factor										
770067126	200:5	3.0	20	50	0.15 B-0.5	0.3 W,X,M,Y/0.6Z	25	150	50	2.5
770068126	200:5	1.5	20	50	0.15 B-1.8	0.3 W,X,M,Y/0.6Z	25	150	50	2.5
770068176	1000:5	1.5	75	127.5	0.15 B-1.8	0.3 W,X,M,Y/0.6Z	25	150	50	2.5

*** For HCEP Option add (–H) to the end of the code number.**
Approximate dimensions in inches.

Voltage Ratings

VT Ratio	Primary (V)	Secondary (V)	Thermal Burden (VA)	Continuous Rated Voltage Factor (Un)	Rated Voltage Factor 30s (Un)
120:1	14400/24940GY	120	750	1.25	1.5

Additional VT ratios are available. Please contact Arteche for details.

Notes:

.....

.....

.....

.....

.....

.....

.....

MK-25

25 kV METERING UNIT

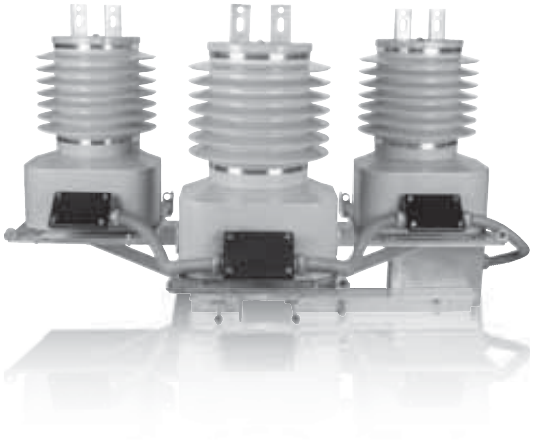

OUTDOOR
60 Hertz

ARTECHE ME/MK series metering units are outdoor, three-phase, pole-mounted metering racks.

The rack is made of lightweight aluminium designed to mount on poles in an upright position. It includes two galvanized steel mounting bolts for attaching the metering unit to the pole, with pole diameters available from 8” to 14”. Optional galvanized steel structures and/or other pole diameters are available upon request.

MK series incorporate 3 combined transformers mounted vertically. Their core is encapsulated with Type B epoxy resin which provides excellent internal dielectric properties and mechanical strength. The external layer of Cycloaliphatic Epoxy Resin (CEP) provides resistance to ultraviolet rays and the effects of tracking and erosion on the exterior of the transformer ensuring a long mechanical and electrical life. The transformer is maintenance free.

The external layer can be manufactured with Hydrophobic Cycloaliphatic Epoxy Resin (HCEP) which improves service life expectancy due to its improved tracking and erosion resistance. HCEP additionally increases the transformer’s weatherability and offers better performance in heavily polluted environments.

The core is built with high permeability grain oriented silicon steel laminations for low losses. The windings are copper wire with copper plate double isolation. The concentric distribution of the coils prevents magnetic flux leakage, achieving greater accuracy and higher capacity to withstand mechanical stresses in adverse operating conditions.

Partial Discharge measurements exceed the IEEE, CAN/CSA and IEC requirements.

Mechanical characteristics

Insulation Material	Colors	Weight (lbs.)	Creepage distance (in)	Strike distance (in)
Resin	Gray*	755	32.6	16

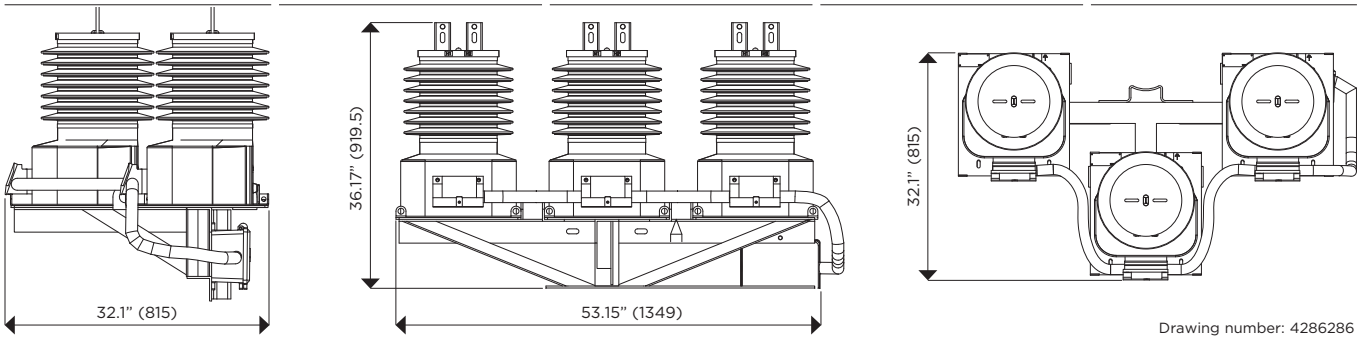

Drawing number: 4286286

CONNECTIONS

PRIMARY TERMINAL

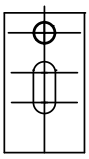

Type: NEMA-2
Material: Copper

GROUND CONNECTOR

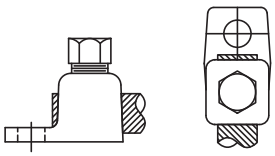

Type: TE-12 250 • Material: Copper
Range: 4TRE-250MCM

SECONDARY TERMINAL

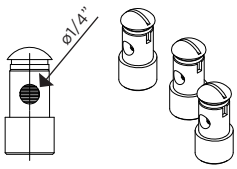

Type: Quick Connector • Material: Brass

MARKING

CONNECTION PLATE

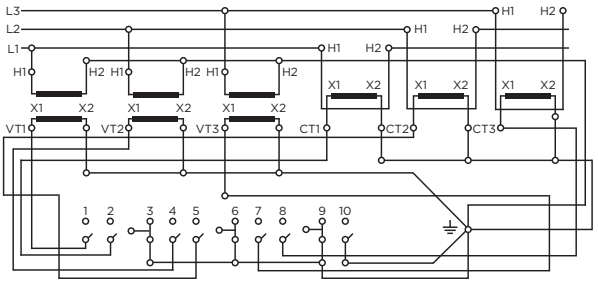

Approximate dimensions in inches (mm).
*Brown color available upon request

MK-25

25 kV METERING UNIT

Electrical characteristics

Code * (CEP)	Current Ratio (Primary: Secondary)	Continuous Thermal Current Rating Factor @ 30°C	Short-time Thermal Current (kA/1s)	Short-time Mechanical Current (kA_{peak})	IEEE Metering Accuracy [Current Transformer]	IEEE Metering Accuracy [Voltage Transformer]	Nominal Voltage System (kV)	BIL (kV)	Power-Frequency Withstand Voltage (1 min)	
									Primary & Secondary (kV_{rms})	Secondary Winding (kV_{rms})
770681016	5:5	1.5	0.5	1.4	0.3 B-0.5	0.3 W,X,M,Y/0.6Z	25	150	50	2.5
770681026	10:5	1.5	1	2.7	0.3 B-0.5	0.3 W,X,M,Y/0.6Z	25	150	50	2.5
770681036	15:5	1.5	1.5	4.1	0.3 B-0.5	0.3 W,X,M,Y/0.6Z	25	150	50	2.5
770681046	20:5	1.5	2	5.4	0.3 B-0.5	0.3 W,X,M,Y/0.6Z	25	150	50	2.5
770681056	25:5	1.5	2.5	6.8	0.3 B-0.5	0.3 W,X,M,Y/0.6Z	25	150	50	2.5
770681066	30:5	1.5	3	8.1	0.3 B-0.5	0.3 W,X,M,Y/0.6Z	25	150	50	2.5
770681076	40:5	1.5	4	10.8	0.3 B-0.5	0.3 W,X,M,Y/0.6Z	25	150	50	2.5
770681086	50:5	1.5	5	13.5	0.3 B-0.5	0.3 W,X,M,Y/0.6Z	25	150	50	2.5
770681096	75:5	1.5	7.5	20.3	0.3 B-0.5	0.3 W,X,M,Y/0.6Z	25	150	50	2.5
770681106	100:5	1.5	10	27	0.3 B-0.5	0.3 W,X,M,Y/0.6Z	25	150	50	2.5
770681116	150:5	1.5	15	40.5	0.3 B-0.5	0.3 W,X,M,Y/0.6Z	25	150	50	2.5
770681126	200:5	1.5	20	54	0.3 B-0.5	0.3 W,X,M,Y/0.6Z	25	150	50	2.5
770681136	300:5	1.5	30	81	0.3 B-0.5	0.3 W,X,M,Y/0.6Z	25	150	50	2.5
770681146	400:5	1.5	40	108	0.3 B-0.5	0.3 W,X,M,Y/0.6Z	25	150	50	2.5
770681156	600:5	1.0	60	162	0.3 B-0.5	0.3 W,X,M,Y/0.6Z	25	150	50	2.5
770681166	800:5	1.0	60	162	0.3 B-0.5	0.3 W,X,M,Y/0.6Z	25	150	50	2.5
770681176	1000:5	1.0	60	162	0.3 B-0.5	0.3 W,X,M,Y/0.6Z	25	150	50	2.5
770681186	1200:5	1.0	60	162	0.3 B-0.5	0.3 W,X,M,Y/0.6Z	25	150	50	2.5
High Accuracy Extended Range 1% nominal current to Rating Factor										
770687126	200:5	3.0	20	50	0.15 B-0.5	0.3 W,X,M,Y/0.6Z	25	150	50	2.5
770688126	200:5	1.5	20	50	0.15 B-1.8	0.3 W,X,M,Y/0.6Z	25	150	50	2.5
770688176	1000:5	1.5	75	127.5	0.15 B-1.8	0.3 W,X,M,Y/0.6Z	25	150	50	2.5

*** For HCEP Option add (–H) to the end of the code number.**
Approximate dimensions in inches.

Voltage Ratings

VT Ratio	Primary (V)	Secondary (V)	Thermal Burden (VA)	Continuous Rated Voltage Factor (Un)	Rated Voltage Factor 30s (Un)
120:1	14400/24940GY	120	750	1.25	1.5

Additional VT ratios are available. Please contact Arteche for details.

Notes:

ME-025

25 kV METERING UNIT

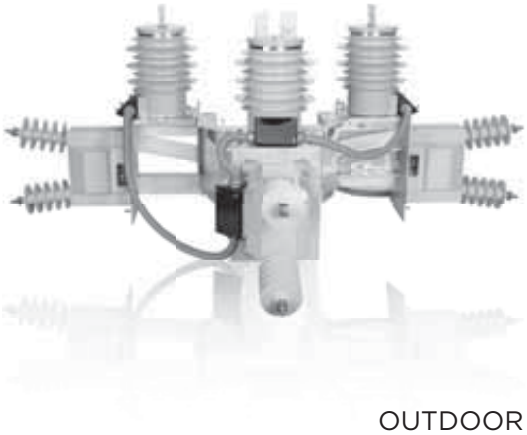

OUTDOOR
60 Hertz

ARTECHE ME/MK series metering units are outdoor. three-phase. pole-mounted metering racks.

The rack is made of lightweight aluminium designed to mount on poles in an upright position. It includes two galvanized steel mounting bolts for attaching the metering unit to the pole. with pole diameters available from 8” to 14”. Optional galvanized steel structures and/or other pole diameters are available upon request.

ME series incorporate 3 current transformers mounted vertically and 3 voltage transformers mounted horizontally. Their core is encapsulated with Type B epoxy resin which provides excellent internal dielectric properties and mechanical strength. The external layer of Cycloaliphatic Epoxy Resin (CEP) provides resistance to ultraviolet rays and the effects of tracking and erosion on the exterior of the transformer ensuring a long mechanical and electrical life. The transformer is maintenance free.

The external layer can be manufactured with Hydrophobic Cycloaliphatic Epoxy Resin (HCEP) which improves service life expectancy due to its improved tracking and erosion resistance. HCEP additionally increases the transformer’s weatherability and offers better performance in heavily polluted environments.

The core is built with high permeability grain oriented silicon steel laminations for low losses. The windings are copper wire with copper plate double isolation. The concentric distribution of the coils prevents magnetic flux leakage. achieving greater accuracy and higher capacity to withstand mechanical stresses in adverse operating conditions.

Partial Discharge measurements exceed the IEEE, CAN/CSA and IEC requirements.

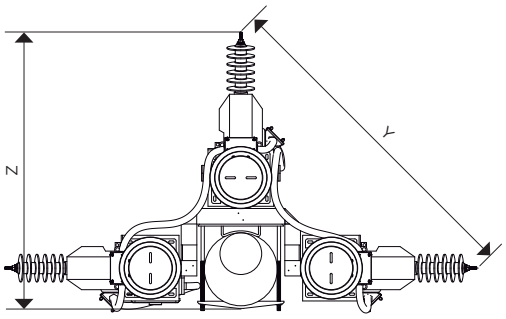

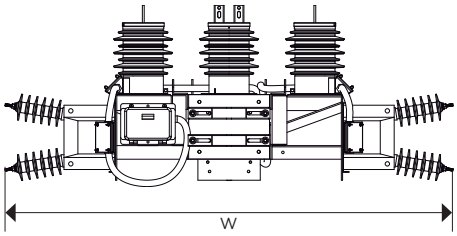

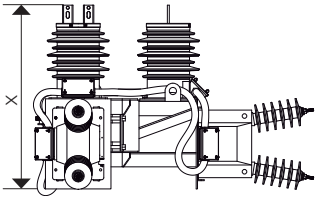

Drawing number: 4287228

	PRIMARY TERMINAL CT	PRIMARY TERMINAL VT	GROUND CONNECTOR	SECONDARY TERMINAL
CONNEC-TIONS	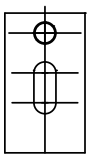	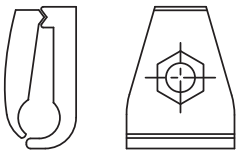	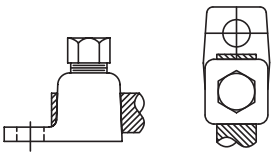	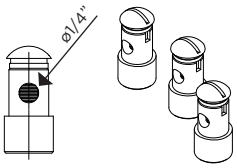
	Type: NEMA-2 Material: Copper	Type: TE-4T Material: Copper Range: 8SOL-4TRE	Type: TE-12-250 Material: Copper Range: 4TRE-250MCM	Type: Quick Connector Material: Brass

ME-025

25 kV METERING UNIT

Characteristics

Type	Transformers		Code * (CEP)		Dimensions (in)				Weigth with Aluminium rack (lb)
	Current	Potential	With FUSE in the secondary box	Without FUSE in the secondary box	W	X	Y	Z	
ME-025	CRE-24	URJ-24	771020005	771020009	91	35.31	64.43	53.25	648
ME-025	CRE-24	VRJ-24	771020006	771020010	90.5	35.31	64.43	53	666
ME-025	CRF-24	URN-24	771020007	771020011	87.5	34.25	61.81	51.5	881
ME-025	CRF-24	VRN-24	771020008	771020012	87.34	34.25	61.81	51.5	881

*** For HCEP Option add (–H) to the end of the code number.**
Approximate dimensions in inches.
For detail electric characteristics see particular instrument transformer detail in its data sheet within this publication.

Notes:

MI-025

25 kV METERING UNIT

OUTDOOR
60 Hertz

ARTECHE MI series metering units are outdoor, three-phase, pad-mounted cabinets.

The cabinet is made of #12 caliber stainless steel lamination (2.7 mm or 0.105 in) with Munsell Green #7GY 3.29/1.5 powder finish. The doors are pad-lockable with a three point latch and a penta-head bolt.

MI series incorporate 3 combined transformers. Their core is encapsulated with Type B epoxy resin which provides excellent internal dielectric properties and mechanical strength, ensuring a long mechanical and electrical life. The transformer is maintenance free.

The entire surface of the transformer is coated with a conductive layer that is intended to be solidly grounded when energized. This allows for compact mounting inside switchgear or enclosures.

The core is built with high permeability grain oriented silicon steel laminations for low losses. The windings are copper wire with copper plate double isolation. The concentric distribution of the coils prevents magnetic flux leakage, achieving greater accuracy and higher capacity to withstand mechanical stresses in adverse operating conditions.

Partial Discharge measurements exceed the IEEE, CAN/CSA and IEC requirements.

The primary bushing well connections are IEEE 386 compliant, rated 200 A loadbreak or 600 A non load-break. The secondary terminals are pre- wired to a 10 position test switch and 9S meter socket in standard red/black colors.

Mechanical characteristics

Material	Colors	Weight (lbs.)
Stainless steel	Munsell Green	992

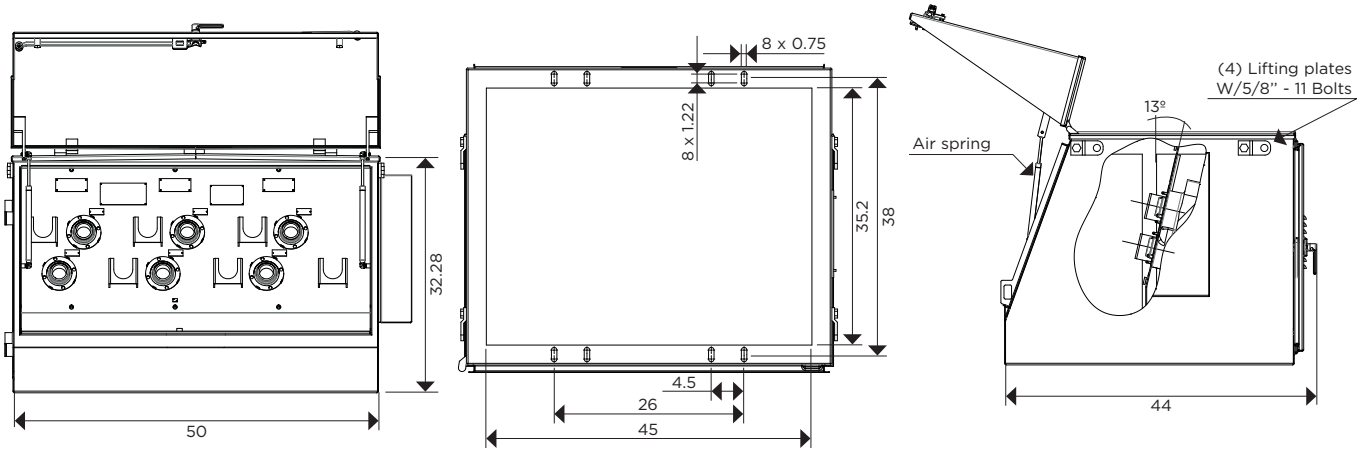

Drawing number: 4287251

MARKING

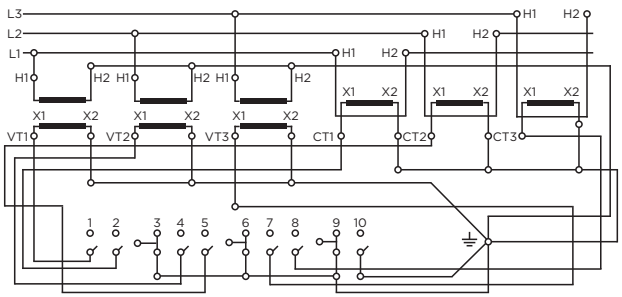

Approximate dimensions in inches (mm).

MI-025

25 kV METERING UNIT

Electrical characteristics

Code	Current Ratio (Primary: Secondary)	Continuous Thermal Current Rating Factor @ 30°C	Short-time Thermal Current (kA/1s)	Short-time Mechanical Current (kA_{peak})	IEEE Metering Accuracy [Current Transformer]	IEEE Metering Accuracy [Voltage Transformer]	Nominal Voltage System (kV)	BIL (kV)	Power-Frequency Withstand Voltage (1 min)	
									Primary & Secondary (kV_{rms})	Secondary Winding (kV_{rms})
770584016	5:5	2.0	0.5	1.25	0.3 B-0.5	0.3 W,X,M,Y/1.2Z	25	150	50	2.5
770584026	10:5	2.0	1	2.5	0.3 B-0.5	0.3 W,X,M,Y/1.2Z	25	150	50	2.5
770584036	15:5	2.0	1.5	3.75	0.3 B-0.5	0.3 W,X,M,Y/1.2Z	25	150	50	2.5
770584046	20:5	2.0	2	5	0.3 B-0.5	0.3 W,X,M,Y/1.2Z	25	150	50	2.5
770584056	25:5	2.0	2.5	6.25	0.3 B-0.5	0.3 W,X,M,Y/1.2Z	25	150	50	2.5
770584066	30:5	2.0	3	7.5	0.3 B-0.5	0.3 W,X,M,Y/1.2Z	25	150	50	2.5
770584086	40:5	2.0	4	10	0.3 B-0.5	0.3 W,X,M,Y/1.2Z	25	150	50	2.5
770584106	50:5	2.0	5	12.5	0.3 B-0.5	0.3 W,X,M,Y/1.2Z	25	150	50	2.5
770584156	75:5	2.0	7.5	18.75	0.3 B-0.5	0.3 W,X,M,Y/1.2Z	25	150	50	2.5
770584206	100:5	2.0	10	25	0.3 B-0.5	0.3 W,X,M,Y/1.2Z	25	150	50	2.5
770585306	150:5	1.33	10	25	0.3 B-0.5	0.3 W,X,M,Y/1.2Z	25	150	50	2.5
770585406	200:5	1.0	10	25	0.3 B-0.5	0.3 W,X,M,Y/1.2Z	25	150	50	2.5
770581136	300:5	1.5	30	75	0.3 B-0.5	0.3 W,X,M,Y/1.2Z	25	125	50	2.5
770581146	400:5	1.5	40	100	0.3 B-0.5	0.3 W,X,M,Y/1.2Z	25	125	50	2.5
770581156	600:5	1.0	60	150	0.3 B-0.5	0.3 W,X,M,Y/1.2Z	25	125	50	2.5
High Accuracy Extended Range 1% nominal current to Rating Factor										
770581106	100:5	2.0	10	25	0.15 B-0.5	0.3 W,X,M,Y/1.2Z	25	125	50	2.5
770581126	200:5	2.0	20	50	0.15 B-0.5	0.3 W,X,M,Y/1.2Z	25	125	50	2.5
770581156	600:5	1.0	48	120	0.15 B-0.5	0.3 W,X,M,Y/1.2Z	25	125	50	2.5

Additional ratings available upon request.

Voltage Ratings

VT Ratio	Primary (V)	Secondary (V)	Thermal Burden (VA)	Continuous Rated Voltage Factor (Un)	Rated Voltage Factor 30s (Un)
120:1	14400/24940GY	120	750	1.1	1.25

Additional VT ratios are available. Please contact Arteche for details.

Notes:

KM-34

34.5 kV COMBINED TRANSFORMER

OUTDOOR
60 Hertz

ARTECHE KM series are dry type outdoor service combination CT-PT. The core is encapsulated with Type B epoxy resin which provides excellent internal dielectric properties and mechanical strength. The external layer of Cycloaliphatic Epoxy Resin (CEP) provides resistance to ultraviolet rays and the effects of tracking and erosion on the exterior of the transformer ensuring a long mechanical and electrical life. The transformer is maintenance free.

The external layer can be manufactured with Hydrophobic Cycloaliphatic Epoxy Resin (HCEP) which improves service life expectancy due to its improved tracking and erosion resistance. HCEP additionally increases the transformer's weatherability and offers better performance in heavily polluted environments.

The core is built with high permeability grain oriented silicon steel laminations for low losses. The windings are copper wire with copper plate double isolation. The concentric distribution of the coils prevents magnetic flux leakage, achieving greater accuracy and higher capacity to withstand mechanical stresses in adverse operating conditions.

Partial Discharge measurements exceed IEEE C57.13 2008 requirements

Mechanical characteristics

Insulation Material	Colors	Weight (lbs.)	Creepage distance (in)	Strike distance (in)
Resin	Gray*	264	46	21

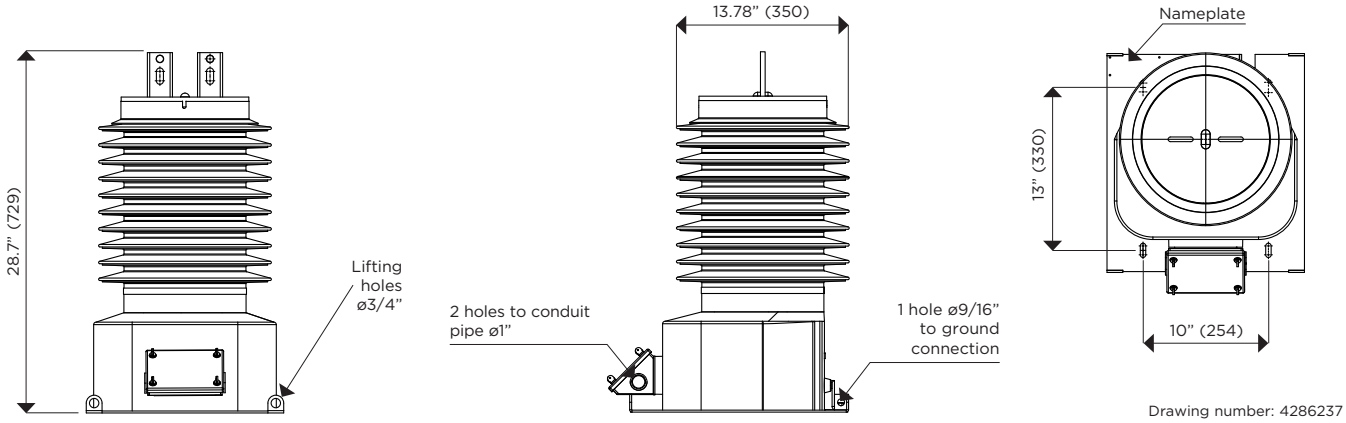

Drawing number: 4286237

CONNECTIONS

PRIMARY TERMINAL

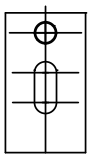

Type: NEMA-2
Material: Copper

GROUND CONNECTOR

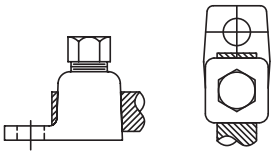

Type: TE-12 250
Material: Copper
Range: 4TRE-250MCM

SECONDARY TERMINAL

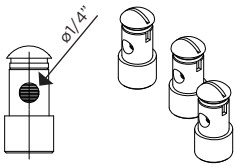

Type: Quick Connector
Material: Brass

MARKING (Single Primary Ratio)

ONE SECONDARY

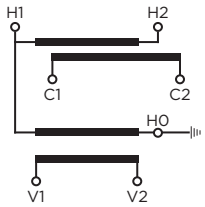

ONE SECONDARY with tap

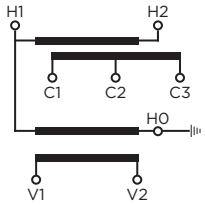

Approximate dimensions in inches (mm).
*Brown color available upon request

KM-34

34.5 kV COMBINED TRANSFORMER

Electrical characteristics

Code * (CEP)	Current Ratio (Primary: Secondary)	Continuous Thermal Current Rating Factor @ 30°C	Short-time Thermal Current (kA/1s)	Short-time Mechanical Current (kA_{peak})	IEEE Metering Accuracy [Current Transformer]	IEEE Metering Accuracy [Voltage Transformer]	Nominal Voltage System (kV)	BIL (kV)	Power-Frequency Withstand Voltage (1 min)	
									Primary & Secondary (kV_{rms})	Secondary Winding (kV_{rms})
770073017	5:5	3.0	0.5	1.4	0.3 B-1.8	0.3 W,X,M,Y/1.2Z	34.5	200	70	2.5
770073027	10:5	3.0	1	2.7	0.3 B-1.8	0.3 W,X,M,Y/1.2Z	34.5	200	70	2.5
770073037	15:5	3.0	1.5	4.1	0.3 B-1.8	0.3 W,X,M,Y/1.2Z	34.5	200	70	2.5
770073047	20:5	3.0	2	5.4	0.3 B-1.8	0.3 W,X,M,Y/1.2Z	34.5	200	70	2.5
770073057	25:5	3.0	2.5	6.8	0.3 B-1.8	0.3 W,X,M,Y/1.2Z	34.5	200	70	2.5
770073067	30:5	3.0	3	8.1	0.3 B-1.8	0.3 W,X,M,Y/1.2Z	34.5	200	70	2.5
770073077	40:5	3.0	4	10.8	0.3 B-1.8	0.3 W,X,M,Y/1.2Z	34.5	200	70	2.5
770073087	50:5	3.0	5	13.5	0.3 B-1.8	0.3 W,X,M,Y/1.2Z	34.5	200	70	2.5
770073097	75:5	3.0	7.5	20.3	0.3 B-1.8	0.3 W,X,M,Y/1.2Z	34.5	200	70	2.5
770073107	100:5	3.0	10	27	0.3 B-1.8	0.3 W,X,M,Y/1.2Z	34.5	200	70	2.5
770073117	150:5	3.0	15	40.5	0.3 B-1.8	0.3 W,X,M,Y/1.2Z	34.5	200	70	2.5
770073127	200:5	3.0	20	54	0.3 B-1.8	0.3 W,X,M,Y/1.2Z	34.5	200	70	2.5
770073137	300:5	3.0	30	81	0.3 B-1.8	0.3 W,X,M,Y/1.2Z	34.5	200	70	2.5
770073147	400:5	3.0	40	108	0.3 B-1.8	0.3 W,X,M,Y/1.2Z	34.5	200	70	2.5
770073157	600:5	2.0	60	162	0.3 B-1.8	0.3 W,X,M,Y/1.2Z	34.5	200	70	2.5
770071167	800:5	1.5	60	162	0.3 B-1.8	0.3 W,X,M,Y/1.2Z	34.5	200	70	2.5
770071177	1000:5	1.2	60	162	0.3 B-1.8	0.3 W,X,M,Y/1.2Z	34.5	200	70	2.5
770071187	1200:5	1.0	60	162	0.3 B-1.8	0.3 W,X,M,Y/1.2Z	34.5	200	70	2.5
770074047	10/20:5	2.0/1.5	2	5,4	0.3B-0.5/B-1.8	0.3 W,X,M,Y/1.2Z	34.5	200	70	2.5
770074087	25/50:5	2.0/1.5	5	13,5	0.3B-0.5/B-1.8	0.3 W,X,M,Y/1.2Z	34.5	200	70	2.5
770074127	100/200:5	2.0/1.5	20	54	0.3B-0.5/B-1.8	0.3 W,X,M,Y/1.2Z	34.5	200	70	2.5
770074157	300/600:5	2.0/1.5	60	162	0.3B-0.5/B-1.8	0.3 W,X,M,Y/1.2Z	34.5	200	70	2.5
770074167	400/800:5	2.0/1.5	60	162	0.3B-0.5/B-1.8	0.3 W,X,M,Y/1.2Z	34.5	200	70	2.5
770073167	400/800:5	3.0/1.5	60	162	0.3B-0.5/B-1.8	0.3 W,X,M,Y/1.2Z	34.5	200	70	2.5
770074177	500/1000:5	2.0/1.2	60	162	0.3B-0.5/B-1.8	0.3 W,X,M,Y/1.2Z	34.5	200	70	2.5
770074187	600/1200:5	2.0/1.0	60	162	0.3B-0.5/B-1.8	0.3 W,X,M,Y/1.2Z	34.5	200	70	2.5
High Accuracy Extended Range 1% nominal current to Rating Factor										
770077127	200:5	3.0	20	50	0.15 B-0.5	0.3 W,X,M,Y/1.2Z	34.5	200	70	2.5
770078127	200:5	1.5	20	50	0.15 B-1.8	0.3 W,X,M,Y/1.2Z	34.5	200	70	2.5
770078177	1000:5	1.5	75	127.5	0.15 B-1.8	0.3 W,X,M,Y/1.2Z	34.5	200	70	2.5

*** For HCEP Option add (–H) to the end of the code number.**
Approximate dimensions in inches.

Voltage Ratings

VT Ratio	Primary (V)	Secondary (V)	Thermal Burden (VA)	Continuous Rated Voltage Factor (Un)	Rated Voltage Factor 30s (Un)
175:1	20125/34500GY	115	750	1.25	1.5

Additional VT ratios are available. Please contact Arteche for details.

Notes:

.....

.....

.....

.....

.....

.....

.....

MK-34

34.5 kV METERING UNIT

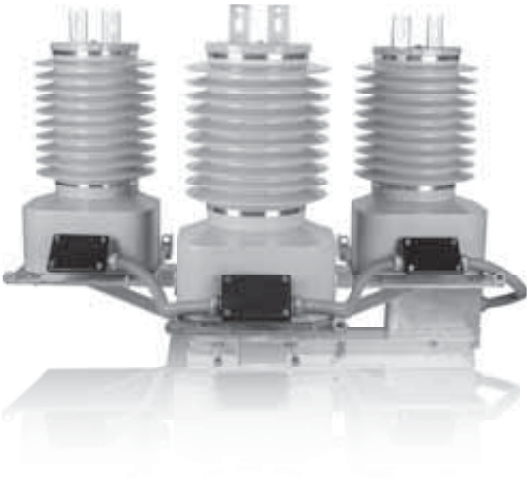

OUTDOOR
60 Hertz

ARTECHE ME/MK series metering units are outdoor, three-phase, pole-mounted metering racks.

The rack is made of lightweight aluminium designed to mount on poles in an upright position. It includes two galvanized steel mounting bolts for attaching the metering unit to the pole, with pole diameters available from 8” to 14”. Optional galvanized steel structures and/or other pole diameters are available upon request.

MK series incorporate 3 combined transformers mounted vertically. Their core is encapsulated with Type B epoxy resin which provides excellent internal dielectric properties and mechanical strength. The external layer of Cycloaliphatic Epoxy Resin (CEP) provides resistance to ultraviolet rays and the effects of tracking and erosion on the exterior of the transformer ensuring a long mechanical and electrical life. The transformer is maintenance free.

The external layer can be manufactured with Hydrophobic Cycloaliphatic Epoxy Resin (HCEP) which improves service life expectancy due to its improved tracking and erosion resistance. HCEP additionally increases the transformer’s weatherability and offers better performance in heavily polluted environments.

The core is built with high permeability grain oriented silicon steel laminations for low losses. The windings are copper wire with copper plate double isolation. The concentric distribution of the coils prevents magnetic flux leakage, achieving greater accuracy and higher capacity to withstand mechanical stresses in adverse operating conditions.

Partial Discharge measurements exceed the IEEE, CAN/CSA and IEC requirements.

Mechanical characteristics

Insulation Material	Colors	Weight (lbs.)	Creepage distance (in)	Strike distance (in)
Resin	Gray*	857	46	21

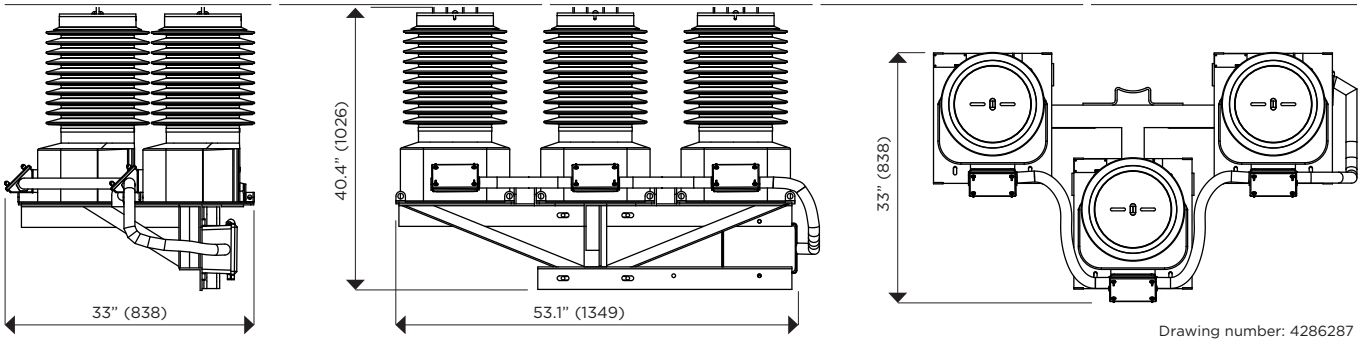

Drawing number: 4286287

CONNECTIONS

PRIMARY TERMINAL

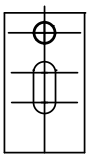

Type: NEMA-2
Material: Copper

GROUND CONNECTOR

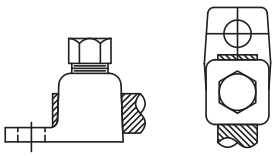

Type: TE-12 250 • Material: Copper
Range: 4TRE-250MCM

SECONDARY TERMINAL

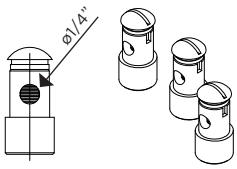

Type: Quick Connector • Material: Brass

MARKING

CONNECTION PLATE

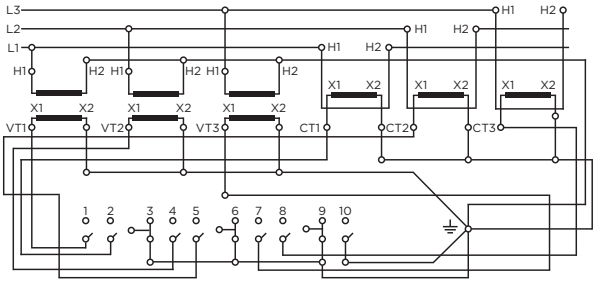

Approximate dimensions in inches (mm).
*Brown color available upon request

MK-34

34.5 kV METERING UNIT

Electrical characteristics

Code* (CEP)	Current Ratio (Primary: Secondary)	Continuous Thermal Current Rating Factor @ 30°C	Short-time Thermal Current (kA/1s)	Short-time Mechanical Current (kA_{peak})	IEEE Metering Accuracy [Current Transformer]	IEEE Metering Accuracy [Voltage Transformer]	Nominal Voltage System (kV)	BIL (kV)	Power-Frequency Withstand Voltage (1 min)	
									Primary & Secondary (kV_{rms})	Secondary Winding (kV_{rms})
770693017	5:5	3.0	0.5	1.4	0.3 B-1.8	0.3 W,X,M,Y/1.2Z	34.5	200	70	2.5
770693027	10:5	3.0	1	2.7	0.3 B-1.8	0.3 W,X,M,Y/1.2Z	34.5	200	70	2.5
770693037	15:5	3.0	1.5	4.1	0.3 B-1.8	0.3 W,X,M,Y/1.2Z	34.5	200	70	2.5
770693047	20:5	3.0	2	5.4	0.3 B-1.8	0.3 W,X,M,Y/1.2Z	34.5	200	70	2.5
770693057	25:5	3.0	2.5	6.8	0.3 B-1.8	0.3 W,X,M,Y/1.2Z	34.5	200	70	2.5
770693067	30:5	3.0	3	8.1	0.3 B-1.8	0.3 W,X,M,Y/1.2Z	34.5	200	70	2.5
770693077	40:5	3.0	4	10.8	0.3 B-1.8	0.3 W,X,M,Y/1.2Z	34.5	200	70	2.5
770693087	50:5	3.0	5	13.5	0.3 B-1.8	0.3 W,X,M,Y/1.2Z	34.5	200	70	2.5
770693097	75:5	3.0	7.5	20.3	0.3 B-1.8	0.3 W,X,M,Y/1.2Z	34.5	200	70	2.5
770693107	100:5	3.0	10	27	0.3 B-1.8	0.3 W,X,M,Y/1.2Z	34.5	200	70	2.5
770693117	150:5	3.0	15	40.5	0.3 B-1.8	0.3 W,X,M,Y/1.2Z	34.5	200	70	2.5
770693127	200:5	3.0	20	54	0.3 B-1.8	0.3 W,X,M,Y/1.2Z	34.5	200	70	2.5
770693137	300:5	3.0	30	81	0.3 B-1.8	0.3 W,X,M,Y/1.2Z	34.5	200	70	2.5
770693147	400:5	3.0	40	108	0.3 B-1.8	0.3 W,X,M,Y/1.2Z	34.5	200	70	2.5
770693157	600:5	2.0	60	162	0.3 B-1.8	0.3 W,X,M,Y/1.2Z	34.5	200	70	2.5
770693167	800:5	1.5	60	162	0.3 B-1.8	0.3 W,X,M,Y/1.2Z	34.5	200	70	2.5
770693177	1000:5	1.2	60	162	0.3 B-1.8	0.3 W,X,M,Y/1.2Z	34.5	200	70	2.5
770693187	1200:5	1.0	60	162	0.3 B-1.8	0.3 W,X,M,Y/1.2Z	34.5	200	70	2.5
High Accuracy Extended Range 1% nominal current to Rating Factor										
770697127	200:5	3.0	20	54	0.15 B-0.5	0.3 W,X,M,Y/0.6Z	34.5	200	70	2.5
770698127	200:5	1.5	20	54	0.15 B-1.8	0.3 W,X,M,Y/0.6Z	34.5	200	70	2.5
770698177	1000:5	1.5	75	127.5	0.15 B-1.8	0.3 W,X,M,Y/0.6Z	34.5	200	70	2.5

*** For HCEP Option add (–H) to the end of the code number.**
Approximate dimensions in inches.

Voltage Ratings

VT Ratio	Primary (V)	Secondary (V)	Thermal Burden (VA)	Continuous Rated Voltage Factor (Un)	Rated Voltage Factor 30s (Un)
175:1	20125/34500GY	115	750	1.25	1.5

Additional VT ratios are available. Please contact Arteche for details.

Notes:

ME-036

34.5 kV METERING UNIT

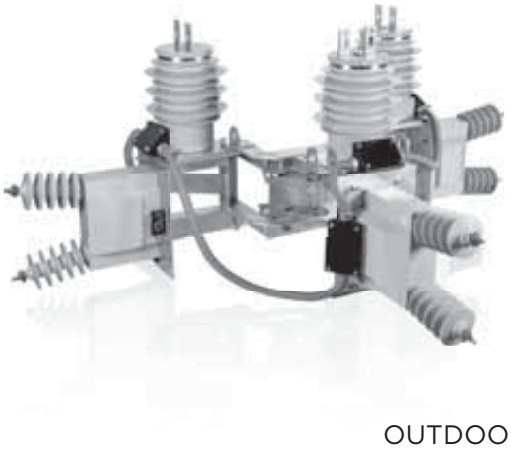

OUTDOOR
60 Hertz

ARTECHE ME/MK series metering units are outdoor. three-phase. pole-mounted metering racks.

The rack is made of lightweight aluminium designed to mount on poles in an upright position. It includes two galvanized steel mounting bolts for attaching the metering unit to the pole. with pole diameters available from 8” to 14”. Optional galvanized steel structures and/or other pole diameters are available upon request.

ME series incorporate 3 current transformers mounted vertically and 3 voltage transformers mounted horizontally. Their core is encapsulated with Type B epoxy resin which provides excellent internal dielectric properties and mechanical strength. The external layer of Cycloaliphatic Epoxy Resin (CEP) provides resistance to ultraviolet rays and the effects of tracking and erosion on the exterior of the transformer ensuring a long mechanical and electrical life. The transformer is maintenance free.

The external layer can be manufactured with Hydrophobic Cycloaliphatic Epoxy Resin (HCEP) which improves service life expectancy due to its improved tracking and erosion resistance. HCEP additionally increases the transformer’s weatherability and offers better performance in heavily polluted environments.

The core is built with high permeability grain oriented silicon steel laminations for low losses. The windings are copper wire with copper plate double isolation. The concentric distribution of the coils prevents magnetic flux leakage. achieving greater accuracy and higher capacity to withstand mechanical stresses in adverse operating conditions.

Partial Discharge measurements exceed the IEEE, CAN/CSA and IEC requirements.

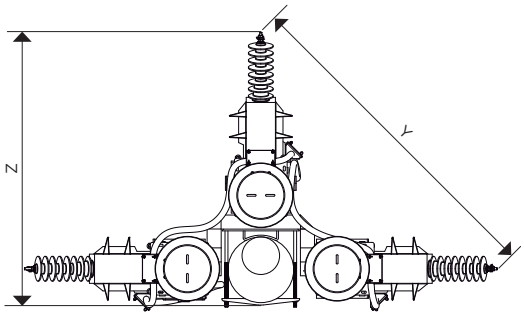

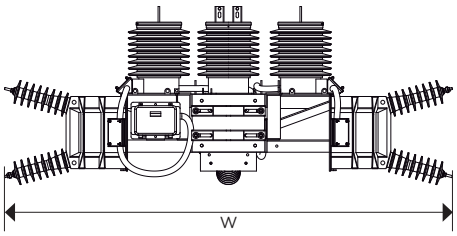

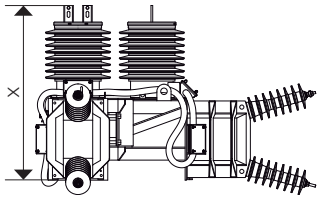

Drawing number: 4287229

	PRIMARY TERMINAL CT	PRIMARY TERMINAL VT	GROUND CONNECTOR	SECONDARY TERMINAL
CONNEC-TIONS	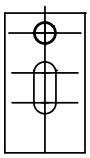	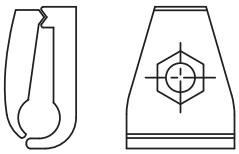	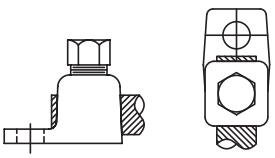	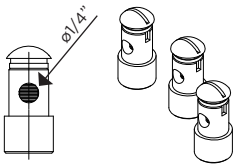
	Type: NEMA-2 Material: Copper	Type: TE-4T Material: Copper Range: 8SOL-4TRE	Type: TE-12-250 Material: Copper Range: 4TRE-250MCM	Type: Quick Connector Material: Brass

ME-036

34.5 kV METERING UNIT

Characteristics

Type	Transformers		Code * (CEP)		Dimensions (in)				Weigth with Aluminium rack (lb)
	Current	Potential	With FUSE in the secondary box	Without FUSE in the secondary box	W	X	Y	Z	
ME-036	CRF-36	URS-36	771010003	771010005	102.5	37	72.5	59	1060
ME-036	CRF-36	VRS-36	771010004	771010006	100.75	37	66.75	58.12	1087

*** For HCEP Option add (–H) to the end of the code number.**
Approximate dimensions in inches.
For detail electric characteristics see particular instrument transformer detail in its data sheet within this publication.

Notes:

arteche
Moving together

› ARTECHE
Manufacturing
Facilities.

› ARTECHE
USA Inc.

Arteche USA
18503 Pines Blvd. Suite 313.
Pembroke Pines, Florida 33029
Phone: 954 438 9499
Fax: 954 438 9959
info@artecheusa.com
www.arteche.com/unitusa

Updates: ARTECHE_DS_trfMVGuide_EN
Version: D2