arteche

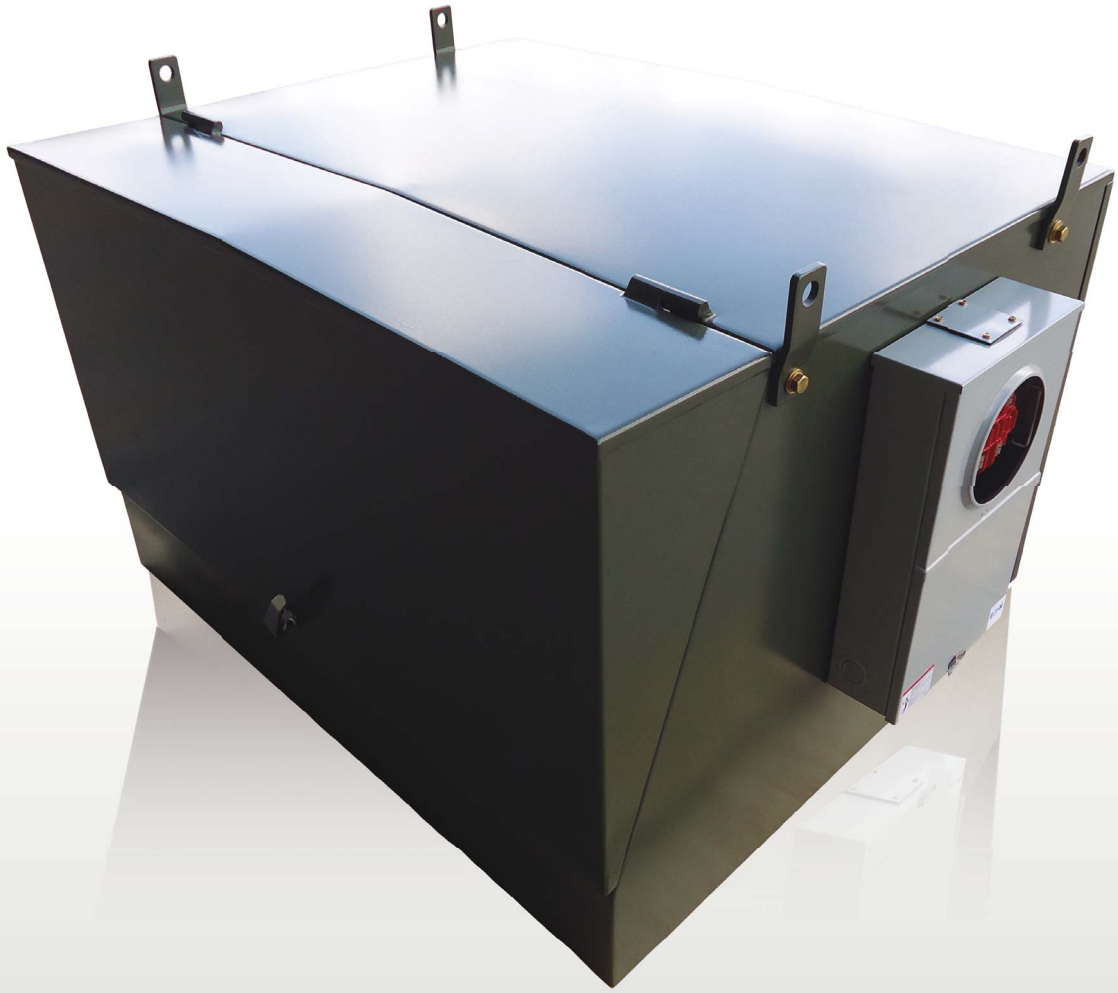

METERING UNITS

THREE-PHASE PAD MOUNTED OUTDOOR METERING UNITS

METERING UNITS

The MI series metering units are outdoor, three-phase, pad-mounted cabinets rated for use on systems up to 25 kV (125 kV BIL). The MI units are IEEE, CAN/CSA, IEC compliant with 0.3 metering accuracy class.

APPLICATIONS

The MI metering cabinet is appropriate for three phase underground cable installations in urban distribution networks. The cabinet's aesthetic appearance makes it ideal for use in residential or commercial environments.

ADVANTAGES

- Low-profile primary metering cabinet for underground cable installations.
- Compact solution providing significant space savings as compared to other more bulky solutions.
- Reduced visual impact in public locations.
- State-of-the-art technology with KCB combined instrument transformers.
- Cost effective due to its compact design and advanced technology.

CONNECTION CONFIGURATION

The MI metering cabinet is ideal for use with three phase "Y" metering systems.

TECHNICAL CHARACTERISTICS

The MI metering units are comprised of two dead front compartments, one with 3 combined instrument transformers and the other with 6 bushing well inserts.

A meter socket with secondary connections is located outside the cabinet.

- The cabinet is made of #12 caliber stainless steel lamination (2.7 mm or 0.105 in) with Munsell Green #7GY 3.29/1.5 powder finish.
- The cabinet doors are pad-lockable with a three point latch and a penta-head bolt.
- The primary connections are radial with one load tap.
- The primary bushing well connections are IEEE 386 compliant, rated 200 A load-break or 600 A non load-break.
- The secondary terminals are pre-wired to a 10 position test switch and 9S meter socket in standard red/black colors.

Mechanical characteristics		
Material	Colors	Weight (lbs.)
Stainless steel	Munsell Green	992

DIMENSIONS

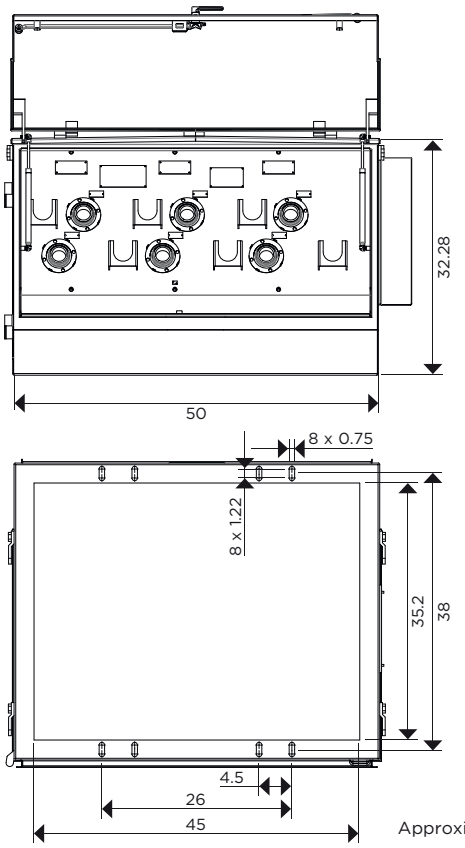

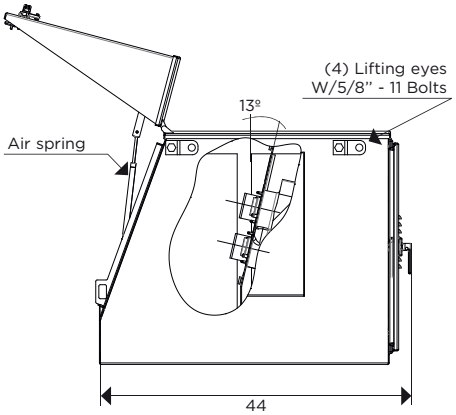

MARKING

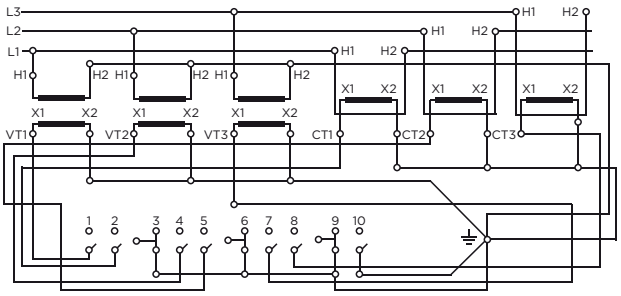

Approximate dimensions in inches.

KCB - COMBINED INSTRUMENT TRANSFORMERS

TECHNICAL CHARACTERISTICS

The KCB unit is a combined (CT/VT) single phase metering instrument transformer. The unit is designed for indoor, dead-front applications such as the MI metering cabinet. The KCB-17 model is rated for use on 15 kV (110 kV BIL) systems while the KCB-24 is rated for use on 25 kV (125 kV BIL) systems.

The core and coil assembly is wound and encapsulated in high electrical strength epoxy resin to provide high electrical withstand capabilities. The entire surface of the transformer is coated with a conductive layer that is solidly grounded when energized. This allows for a compact mounting inside switchgear or enclosures.

The primary terminals are standard 200 or 600 Ampere rated dead-front bushing well and can be connected using IEEE 368 standard inserts and elbow connectors.

The secondary terminals are 1/4" slotted screws with flat and lock washers located inside a metallic terminal cover with two 1" NPT conduit hubs. The ground terminal is provided inside the terminal cover along with a manually operated CT secondary shorting device for safety purposes.

Partial discharge measurements exceed the IEEE, CAN/CSA and IEC requirements.

High Accuracy Extended Range option available with 0.15 metering accuracy from 1% of the rated current up to the Rating Factor.

- The KCB current transformer will operate with 0.15 or 0.3 class accuracy for metering with burdens of B0.1 to B0.5.
- The KCB voltage transformer will operate with 0.3 class accuracy for metering with Y burdens and 1.2 accuracy for Z Burden.
- Designed to meet IEEE, CAN/CSA and IEC standards.

Mechanical characteristics		
Insulation Material	Colors	Weight (lbs.)
Epoxy resin	Gray	150

› KCB 200 A

› KCB 600 A

› View of meter socket wit secondary connections

› Primary connections

› KCB combined transformer mounting inside MI metering unit

arteche
Moving together

ORDERING INFORMATION

Electrical characteristics							
MI-015 Code	MI-025 Code	Current Ratio (Primary: Secondary)	Continuous Thermal Current Rating Factor @ 30°C	Short-time Thermal Current (kA/1s)	Short-time Mechanical Current (kA_{peak})	IEEE Metering Accuracy [Current Transformer]	IEEE Metering Accuracy [Voltage Transformer]
770574011	770584016	5:5	2.0	0.5	1.25	0.3 B-0.5	0.3 W,X,M,Y/1.2Z
770574021	770584026	10:5	2.0	1	2.5	0.3 B-0.5	0.3 W,X,M,Y/1.2Z
770574031	770584036	15:5	2.0	1.5	3.75	0.3 B-0.5	0.3 W,X,M,Y/1.2Z
770574041	770584046	20:5	2.0	2	5	0.3 B-0.5	0.3 W,X,M,Y/1.2Z
770574051	770584056	25:5	2.0	2.5	6.25	0.3 B-0.5	0.3 W,X,M,Y/1.2Z
770574061	770584066	30:5	2.0	3	7.5	0.3 B-0.5	0.3 W,X,M,Y/1.2Z
770574081	770584086	40:5	2.0	4	10	0.3 B-0.5	0.3 W,X,M,Y/1.2Z
770574101	770584106	50:5	2.0	5	12.5	0.3 B-0.5	0.3 W,X,M,Y/1.2Z
770574151	770584156	75:5	2.0	7.5	18.75	0.3 B-0.5	0.3 W,X,M,Y/1.2Z
770574201	770584206	100:5	2.0	10	25	0.3 B-0.5	0.3 W,X,M,Y/1.2Z
770575301	770585306	150:5	1.33	10	25	0.3 B-0.5	0.3 W,X,M,Y/1.2Z
770575401	770585406	200:5	1.0	10	25	0.3 B-0.5	0.3 W,X,M,Y/1.2Z
770571131	770581136	300:5	1.5	30	75	0.3 B-0.5	0.3 W,X,M,Y/1.2Z
770571141	770581146	400:5	1.5	40	100	0.3 B-0.5	0.3 W,X,M,Y/1.2Z
770571151	770581156	600:5	1.0	60	150	0.3 B-0.5	0.3 W,X,M,Y/1.2Z
High Accuracy Extended Range 1% nominal current to Rating Factor							
770571101	770581106	100:5	2.0	10	25	0.15 B-0.5	0.3 W,X,M,Y/1.2Z
770571121	770581126	200:5	2.0	20	50	0.15 B-0.5	0.3 W,X,M,Y/1.2Z
770571151	770581156	600:5	1.0	48	120	0.15 B-0.5	0.3 W,X,M,Y/1.2Z

Metering Unit type	Combined Transformer type	Nominal Voltage System (kV)	BIL (kV)	Power Frequency Withstand Voltage (1 min)		VT Ratio	Primary (V)	Secondary (V)	Thermal Burden (VA)	Continuous Rated Voltage Factor (Un)	Rated Voltage Factor 30s (Un)
				Primary & Secondary (kV_{rms})	Secondary Winding (kV_{rms})						
MI-015	KCB-17	15.0	110	34	2.5	60:1	7200/12470GY	120	750	1.1	1.25
MI-025	KCB-24	25.0	125	50	2.5	120:1	14400/24940GY	120	750	1.1	1.25

Additional VT ratios are available. Please contact Arteche for details.

ARTECHE USA

18503 Pines Blvd. Suite 313 · Pembroke Pines, Florida 33029
Phone: 954 438 9499 · Fax: 954 438 9959
info@artecheusa.com